





DOWNLIGHT 40W SERIES ARTIVIA - 200H1 LOOX PLUS

OVERVIEW

The ARTIVIA Recessed Downlight is an architectural luminaire designed to provide powerful, balanced illumination across larger interior areas while maintaining a clean ceiling appearance. Its recessed optical design supports controlled light distribution and improved visual comfort, making it well suited to hospitality, commercial, retail and other spacious interior environments.

PRODUCT VARIANTS & TECHNICAL DATA

Code	Type / Description	Wattage(W)	Total Luminous Flux(lm)	Luminous Efficacy(lm/W)	Power Factor(pf)	Beam Angle	CRI (Ra)	IP Rating
LD18210G404	4000K, Gray, إضاءة نازلة داون لايت, Eaglerise Driver	40W	4000	100	>0.9	50°	>90	54

TECHNICAL INFORMATION

Frequency	50 -60 Hz
Input Voltage	220-240 VAC
Life Span	50000 H
Protection class	Class II
SDCM	≤ 2
Ambient temperature(Ta)	-15℃+55℃
Operating temperature	-15℃+45℃
UGR	<17
Product Face Size (mm)	Ø212 × H132 mm
Product Weight (gr)	1040
Energy Usage	A+
Lumen Maintenance (L70)	4000

INSTRUCTION

Instruction Manual	

PHOTOMETRIC DIAGRAMS

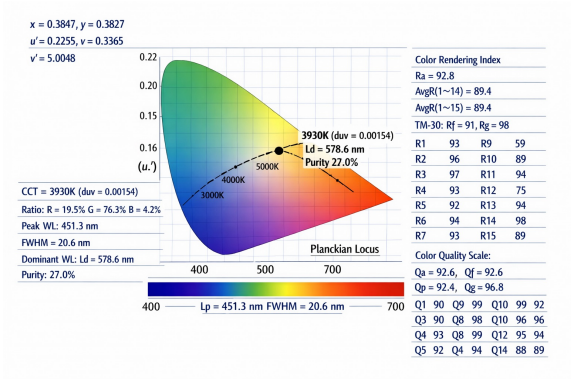

Chromaticity / CCT diagram

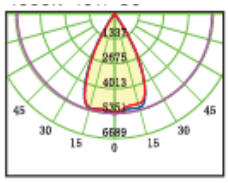

Beam angle / polar diagram

DIMENSION DRAWINGS

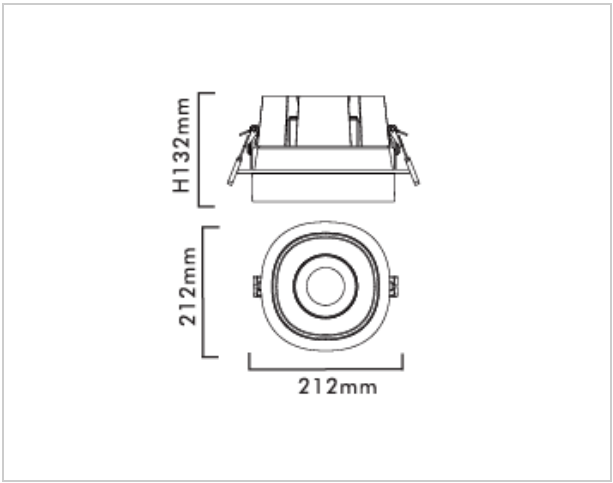

GENERAL INFORMATION

Body Material	Die-Cast Aluminum
Diffuser	PC
Reflector	PC
Mounting Type	Recessed
Cut Size	Ø160 mm
Driver Brand	Eaglerise/Philips
Chip Brand	Osram/Bridgelux
LED Type	COB

APPLICATION AREAS

- Hospitality: Hotel Corridors, Lift Lobbies, Reception Areas, Waiting Zones, Guest-Floor Circulation
- Residential Building: Large Living Areas, Entrance Halls, Dining Areas, Circulation Spaces, etc.
- Commercial Buildings: Reception Areas, Entrance Halls, Internal Corridors, Waiting Areas, Lift Lobbies

