






UFO HIGH BAY 150W LOOX

OVERVIEW

An industrial ceiling-mounted lighting solution designed for large spaces with elevated mounting heights. It provides broad and consistent illumination to improve visibility across demanding work areas. Its main advantage is dependable area coverage with a compact form suited to continuous everyday operation. Ideal for factories, warehouses, production halls, logistics centers and large workshops.

PRODUCT VARIANTS & TECHNICAL DATA

Code	Type / Description	Wattage(W)	Total Luminous Flux(lm)	Luminous Efficacy(lm/W)	Power Factor(pf)	Beam Angle	CRI (Ra)	IP Rating
LIU00G01506	6500K, إضاءة هاي باي, Gray	150W	15000	100	0.5	90°	>80	65

TECHNICAL INFORMATION

Frequency(Hz)	50/60
Voltage(V)	200-250
Life Time(Hrs)	30000
IK	07
Surge Protection(KV)	2
Protection Class	Class I EU
SDCM	<2
Sensor	No
Operating Temperature	-20°C to + 40°C
Product Face Size (mm)	299.5*78.2
Product Weight (gr)	2000

INSTRUCTION

Instruction Manual	

PHOTOMETRIC DIAGRAMS

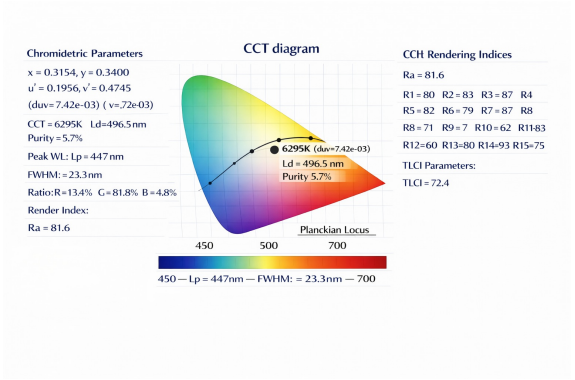

Chromaticity / CCT diagram

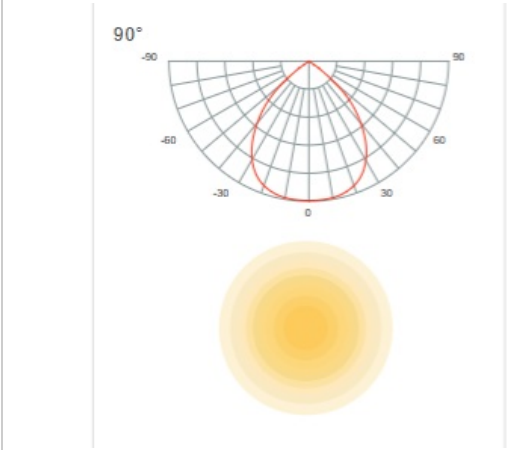

Beam angle / polar diagram

DIMENSION DRAWINGS

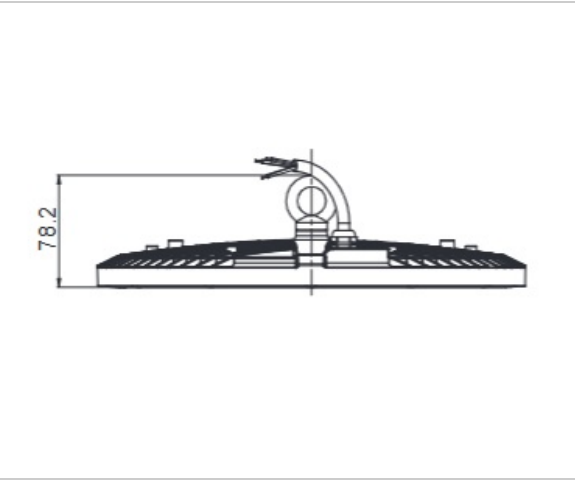

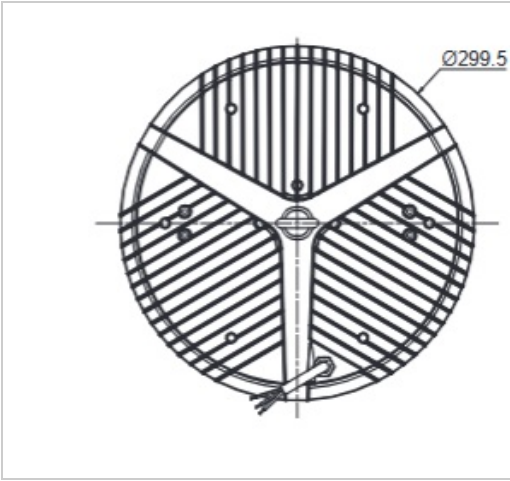

GENERAL INFORMATION

Body Material	Aluminum
Mounting Type	Suspended / Eye-Ring
Driver Brand	DOB
Light Source	SMD2835

APPLICATION AREAS

- Workshops & Maintenance Facilities: Large service bays, repair areas and high-ceiling workspaces
- Industrial & Storage Facilities: Factories, production halls and assembly areas