



DOWNLIGHT 40W SERIES ARTIVIA - L400FH1 LOOX PLUS

OVERVIEW

The ARTIVIA Multi-Module Recessed Downlight combines four light sources within a single linear ceiling fixture to provide controlled, balanced illumination across defined interior areas. Its four-module design helps achieve wider coverage with fewer ceiling openings while maintaining a clean architectural appearance, making it well suited to commercial, hospitality, educational and residential interiors.

PRODUCT VARIANTS & TECHNICAL DATA

Code	Type / Description	Wattage(W)	Total Luminous Flux(lm)	Luminous Efficacy(lm/W)	Power Factor(pf)	Beam Angle	CRI (Ra)	IP Rating
LD18L40G404	4000K, Gray, إضاءة نازلة داون لايت	40W	4000	100	>0.9	36°	>90	54

TECHNICAL INFORMATION

Frequency	50-60 Hz
Input Voltage	220-240 VAC
Life Span	50000 H
Protection class	Class II
SDCM	≤ 2
Ambient temperature(Ta)	-15℃+55℃
Operating temperature	-15℃+45℃
UGR	<17
Product Face Size (mm)	400 × 100 × 60 mm
Product Weight (gr)	1110
Energy Usage	A+
Lumen Maintenance (L70)	4000

INSTRUCTION

Instruction Manual	

PHOTOMETRIC DIAGRAMS

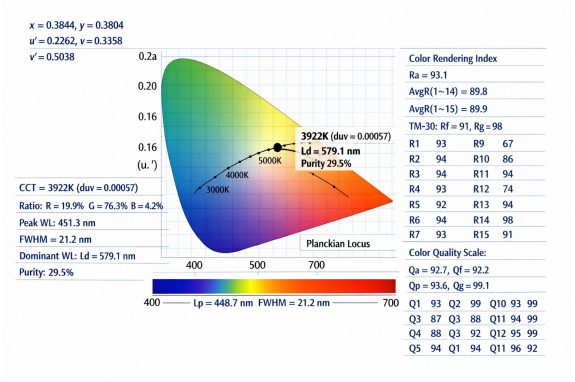

Chromaticity / CCT diagram

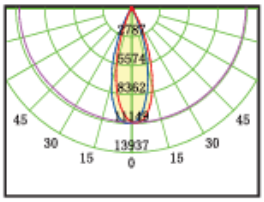

Beam angle / polar diagram

DIMENSION DRAWINGS

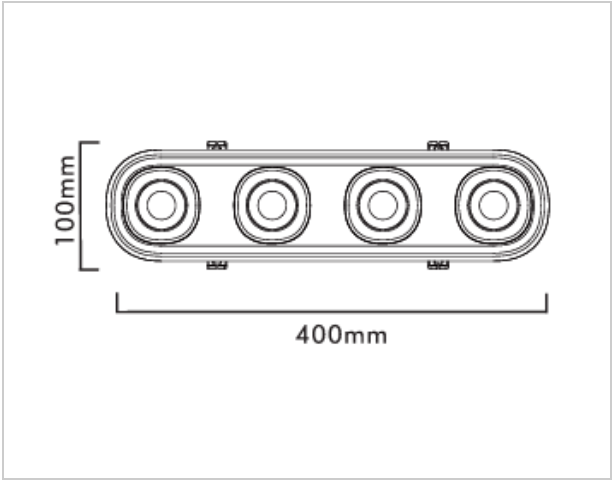

GENERAL INFORMATION

Body Material	Die-Cast Aluminum
Diffuser	PC
Reflector	PC
Mounting Type	Recessed
Cut Size	75mm-305mm
Driver Brand	Eaglerise/Philips
Chip Brand	Osram/Bridgelux
LED Type	COB

APPLICATION AREAS

- Hospitality: Hotel Corridors, Lift Lobbies, Reception Areas, Waiting Zones, Guest-Floor Circulation
- Residential Building: Entrances, Hallways, Dressing Areas, Feature Walls, Artwork Areas, etc.
- Commercial Buildings: Reception Areas, Entrance Halls, Internal Corridors, Waiting Areas, Lift Lobbies

