





DOWNLIGHT 2×10W SERIES ARTIVIA - L200FH1 LOOX PLUS

OVERVIEW

The ARTIVIA Dual-Module Recessed Downlight combines two light sources within a single compact ceiling fixture to provide controlled, balanced illumination across defined interior areas. Its twin-module design helps achieve broader coverage with fewer ceiling openings while maintaining a clean architectural appearance, making it well suited to hospitality, residential and commercial interiors.

PRODUCT VARIANTS & TECHNICAL DATA

Code	Type / Description	Wattage(W)	Total Luminous Flux(lm)	Luminous Efficacy(lm/W)	Power Factor(pf)	Beam Angle	CRI (Ra)	IP Rating
LD18L20G204	4000K, Gray, إضاءة نازلة داون لايت, Eaglerise Driver	20W	2000	100	>0.5	36°	>90	54

TECHNICAL INFORMATION

Frequency	50-60 Hz
Input Voltage	220-240 VAC
Life Span	50000 H
Protection class	Class II
SDCM	≤ 2
Ambient temperature(Ta)	-15℃+55℃
Operating temperature	-15℃+45℃
UGR	<17
Product Face Size (mm)	170 × 75× 104mm
Product Weight (gr)	500
Energy Usage	A+
Lumen Maintenance (L70)	2000

INSTRUCTION

Instruction Manual	

PHOTOMETRIC DIAGRAMS

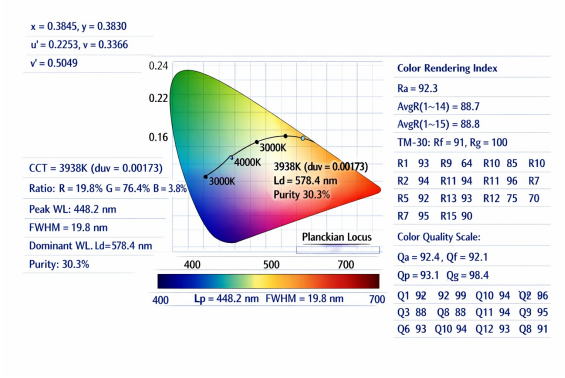

Chromaticity / CCT diagram

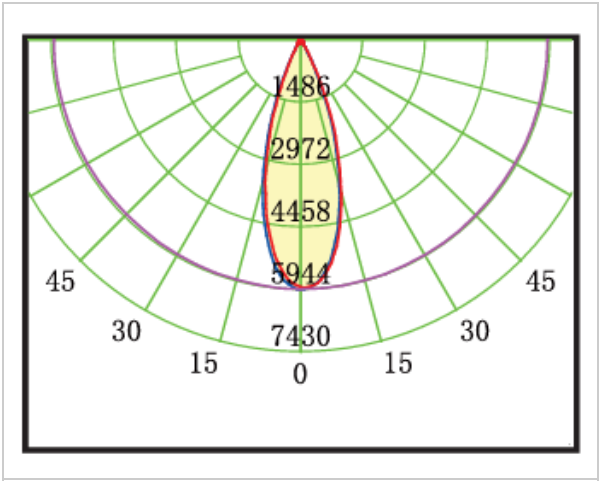

Beam angle / polar diagram

DIMENSION DRAWINGS

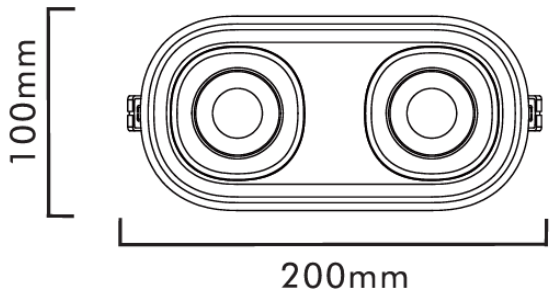

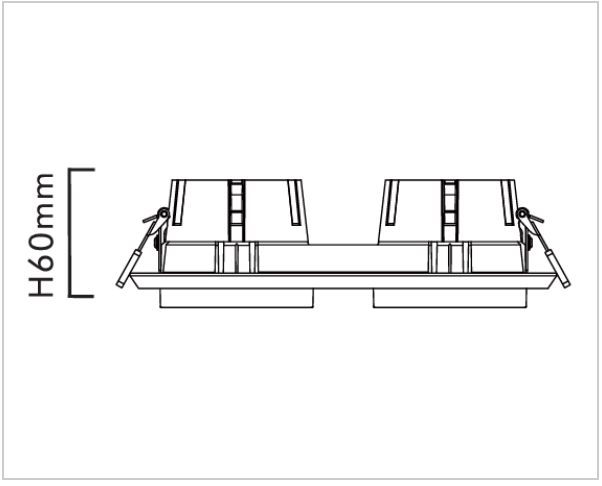

GENERAL INFORMATION

Body Material	Die-Cast Aluminum
Mounting Type	Recessed
Cut Size	45mm-142mm
Driver Brand	Eaglerise/Philips
Chip Brand	Osram/Bridgelux
LED Type	COB

APPLICATION AREAS

- Hospitality: Hotel Reception / Concierge Counter
- Residential Building: Dining Tables, Kitchen Islands, Breakfast Counters, Open-Plan Kitchen–Dining Areas
- Commercial Buildings: Reception Desks, Customer Counters, Waiting-Lounge Tables, Feature Zones

