





SMD DOWNLIGHT 15W ELEGANT SERIES LOOX PLUS

OVERVIEW

This recessed SMD LED downlight combines a deep optical reflector with a clean architectural design to provide comfortable, balanced illumination with reduced glare. An integrated finned heat sink supports reliable thermal performance, while spring-loaded clips ensure secure recessed installation. Available in multiple wattages for residential, hospitality, office, retail and commercial interiors.

PRODUCT VARIANTS & TECHNICAL DATA

Code	Type / Description	Wattage(W)	Total Luminous Flux(lm)	Luminous Efficacy(lm/W)	Power Factor(pf)	Beam Angle	CRI (Ra)	IP Rating
LDO214C0153	2700K, Chrome Black, إضاءة نازلة داون لايت, On/Off Driver	15W	1350	90	>0.5	70°	>80	40

TECHNICAL INFORMATION

Frequency(Hz)	50-60
Input Voltage(V)	180-265
Life Span(Hrs)	50000
SDCM	<2
Sensor	No
Ambient Temperature(Ta)	-15℃+50℃
Operating Temperature	-15℃+45℃
Product Face Size (mm)	Φ110±2*50±2
Product Weight (gr)	163
Energy Usage	A+
Lumen Maintenance(lm)	1350

PHOTOMETRIC DIAGRAMS

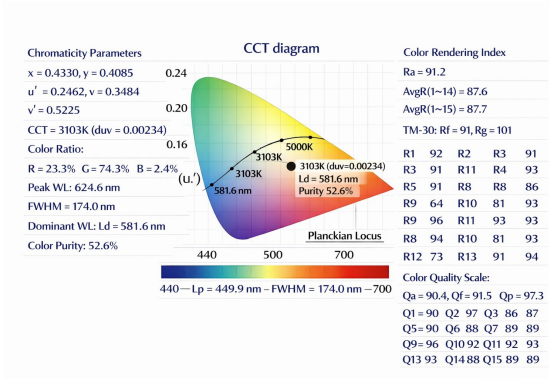

Chromaticity / CCT diagram

DIMENSION DRAWINGS

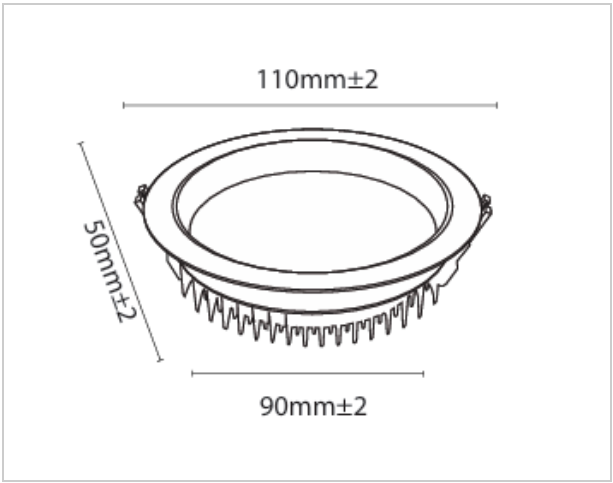

GENERAL INFORMATION

Body Material	Aluminum
Mounting Type	Recessed
Cut Size	Φ90±2mm
LED Type	SMD

APPLICATION AREAS

- Restaurants & Cafés: Dining Areas, Seating Zones, Entrance Areas, Counters, Circulation Areas, etc.
- Residential Building: Living Rooms, Kitchens, Bedrooms, Entrances, Hallways, Dressing Areas, etc.
- Commerical Buildings: Reception Areas, Waiting Areas, Entrance Halls, Corridors, Internal Circulation, etc.

