





# COB DOWNLIGHT 3*10W HARMONIOUS SERIES LOOX PLUS

## OVERVIEW

A recessed LED fixture with adjustable spotlight heads in a single rectangular frame. The heads can be aimed at different points to highlight merchandise, artwork, or architectural details without moving the fixture. It is suited to accent lighting in retail, hospitality, and residential interiors.

## PRODUCT VARIANTS & TECHNICAL DATA

| Code | Type / Description | Wattage(W) | Total Luminous Flux(lm) | Luminous Efficacy(lm/W) | Power Factor(pf) | Beam Angle | CRI (Ra) | IP Rating |
|---|---|---|---|---|---|---|---|---|
| LDO223L0103 | 2700K, Black, إضاءة نازلة داون لايت | 30W | 2700 | 90 | >0.5 | 35° | >80 | 40 |

## TECHNICAL INFORMATION

| | |
|---|---|
| **Frequency(Hz)** | 50-60 |
| **Input Voltage(VAC)** | 180-265 |
| **Life Span(Hrs)** | 50000 |
| **Sensor** | No |
| **Ambient Temperature(Ta)** | -15℃+50℃ |
| **Operating Temperature** | -15℃+45℃ |
| **Product Face Size (mm)** | 285x110x75 |
| **Product Weight (gr)** | 580 |
| **Energy Usage** | A++ |
| **Lumen Maintenance(L70)** | 2700 |

## INSTRUCTION

| | |
|---|---|
| **Instruction Manual** | |

## PHOTOMETRIC DIAGRAMS

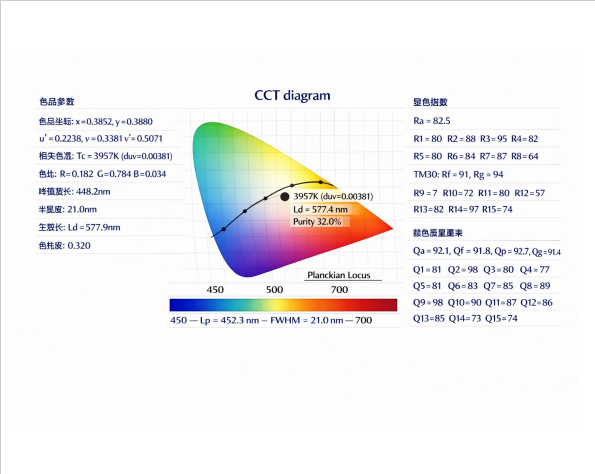


*Chromaticity / CCT diagram*

## DIMENSION DRAWINGS

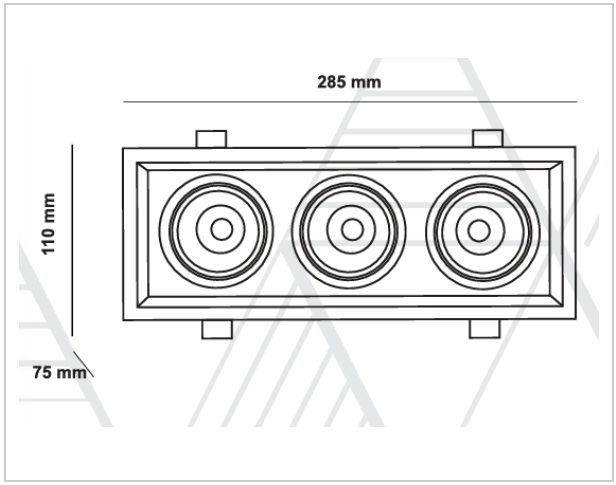

## GENERAL INFORMATION

| | |
|---|---|
| **Body Material** | Aluminum |
| **Mounting Type** | Recessed |
| **Cut Size** | 275x100mm |
| **LED Type** | COB |

## APPLICATION AREAS

- Retail & Showrooms: textile display tables, clothing racks, accessory counters
- Hotels & Hospitality: lobby display consoles, reception counters, buffet stations
- Residential Interiors: entryway consoles, dining sideboards, built-in display shelving

