



48V MAGNETIC LINEAR TRACK LIGHT FROSTED 36W LUMINATION

OVERVIEW

A slim linear luminaire designed to provide smooth, continuous illumination with a clean architectural appearance. Its elongated light-emitting surface creates an even lighting effect while integrating discreetly into modern interior layouts. Its main advantage is the combination of uniform illumination, minimal visual impact, and flexible architectural integration. Suitable for residential, hospitality, retail, commercial, and decorative interior applications.

PRODUCT VARIANTS & TECHNICAL DATA

Code	Type / Description	Wattage(W)	Total Luminous Flux(lm)	Luminous Efficacy(lm/W)	Power Factor(pf)	CRI (Ra)	IP Rating
UIRMLFNR363	3000K, Black, إضاءة مغناطيسية	36W	3240	90	>0.5	>80	20

TECHNICAL INFORMATION

Frequency(Hz)	50/60
Input Voltage(V)	185-265
Life Span(Hrs)	25000
IK	08
Product Face Size (mm)	900*22*25

INSTRUCTION

Instruction Manual	

DIMENSION DRAWINGS

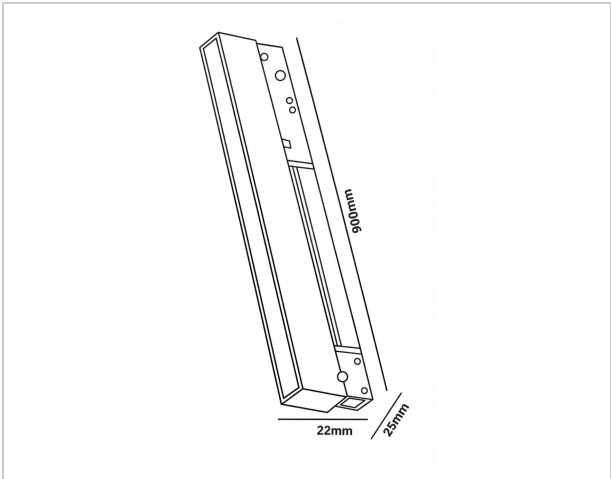

GENERAL INFORMATION

Body Material	Aluminium
Diffuser	PC
Mounting Type	Recessed
Cut Size	20

APPLICATION AREAS

- Residential Building: Dining Table & Kitchen Island, Living Room / TV Wall, Bedrooms
- Commercial & Office Spaces: Reception Desks,Conference Rooms, Retail Stores & Boutique Showrooms
- Hotels & Restaurants: Hotel Lobbies & Atriums, Bar Counters, Dining Booths & Lounge Areas