



MAGNETIC LIGHT 22W GDL20 SERIES LOOX PLUS

OVERVIEW

A distinctive corner-shaped linear luminaire designed to create continuous architectural lighting across directional changes in a track layout. It provides smooth, uniform illumination while visually connecting two lighting directions in a clean geometric form. Its main advantage is the ability to integrate corners and transitions into a coordinated lighting composition. Suitable for residential, retail, hospitality, commercial, and architectural interior applications.

PRODUCT VARIANTS & TECHNICAL DATA

Code	Type / Description	Wattage(W)	Total Luminous Flux(lm)	Luminous Efficacy(lm/W)	Power Factor(pf)	Beam Angle	CRI (Ra)	IP Rating
LKLGDLR0223	2700K, recessed, إضاءة مغناطيسية	22W	1540	70	0.5	120°	≥90	20

TECHNICAL INFORMATION

Frequency(Hz)	60
Input Voltage(V)	48
Life Span(Hrs)	50000
Sensor	No
Operating Temperature	-20℃+50℃
Product Face Size (mm)	302*322*25
Product Weight (gr)	300
Energy Usage	A+
Lumen Maintenance(lm)	1540

INSTRUCTION

Instruction Manual	

PHOTOMETRIC DIAGRAMS

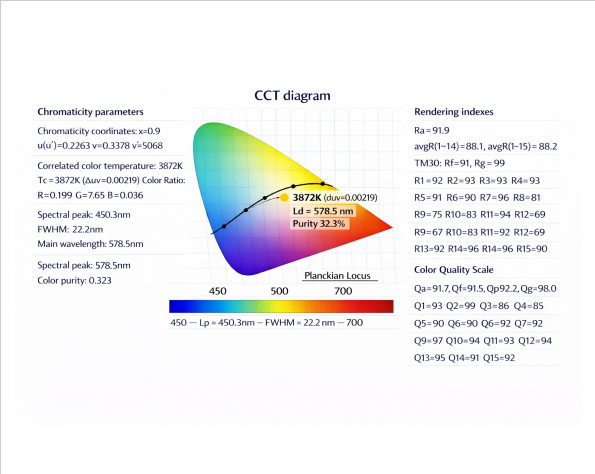

Chromaticity / CCT diagram

DIMENSION DRAWINGS

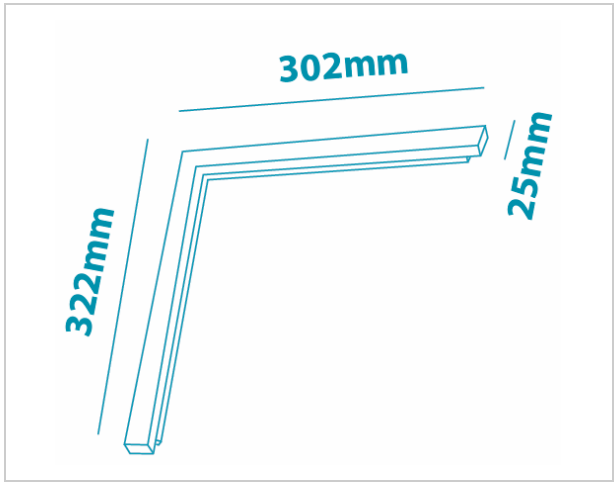

GENERAL INFORMATION

Body Material	Aluminum
Diffuser	Forsted
Mounting Type	Recessed/Surface
Chip Brand	Bridgelux
LED Type	SMD

APPLICATION AREAS

- Hotels & Restaurants: Hotel Lobbies & Atriums, Bar Counters, Dining Booths & Lounge Areas
- Residential Building: Dining Table & Kitchen Island, Living Room / TV Wall, Bedrooms
- Commercial & Office Spaces: Reception Desks,Conference Rooms, Retail Stores & Boutique Showrooms