

ANTIGLARE PROJECT SPOTLIGHT 3W SERIES MLS-25 LOOX

OVERVIEW

A compact recessed spotlight designed to provide focused illumination with minimal visual impact. Its deep-set light source directs attention toward selected objects and surfaces while helping reduce direct glare. The discreet installation and controlled light make it ideal for display shelves, decorative niches and detailed accent lighting in residential, retail and hospitality interiors.

PRODUCT VARIANTS & TECHNICAL DATA

Code	Type / Description	Wattage(W)	Total Luminous Flux(lm)	Luminous Efficacy(lm/W)	Power Factor(pf)	Beam Angle	CRI (Ra)	IP Rating
LDO2M250033	2700K, إضاءة نازلة داون لايت	3W	240	80	>0.5	5º/8º/10º/15º/24º/36º/45º/60º	>80	20

TECHNICAL INFORMATION

Frequency(Hz)	50-60
Input Voltage(V)	180-265
Life Span(Hrs)	50000
SDCM	<5
Sensor	No
Ambient Temperature(Ta)	-20℃+50℃
Product Face Size (mm)	φ30*H65
Energy Usage	A++
Lumen Maintenance(lm)	240

INSTRUCTION

Instruction Manual	

PHOTOMETRIC DIAGRAMS

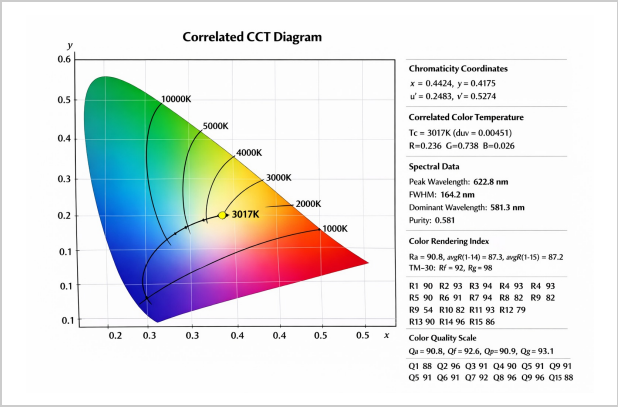

Chromaticity / CCT diagram

DIMENSION DRAWINGS

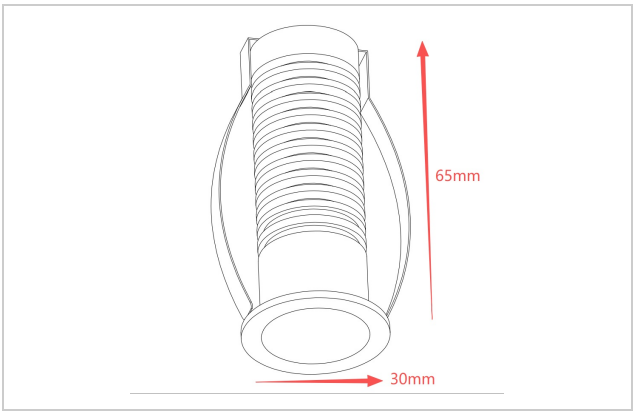

GENERAL INFORMATION

Body Material	Aluminum
Mounting Type	Recessed
Cut Size	Φ25mm
Driver Brand	Lifud/Eaglerise
Chip Brand	Osram/Epistar
LED Type	COB

APPLICATION AREAS

- Hospitality Interiors: Hotel rooms,Reception areas, Restaurants & Cafés
- Residential Interiors: Decorative objects,Cabinets & Shelving, Display niches
- Retail & Showroom Spaces: Product shelves,Display cabinets, Feature displays