

COB ANTI-GLARE DOWNLIGHT 15W LUMINATION

OVERVIEW

This Anti-Glare Recessed Downlight is designed for architectural lighting, using a deep optical system to reduce direct glare and provide balanced illumination with improved visual comfort. Its clean recessed design makes it ideal for hotels, retail and showrooms, offices and commercial interiors where lighting quality and ceiling integration are important.

PRODUCT VARIANTS & TECHNICAL DATA

Code	Type / Description	Wattage(W)	Total Luminous Flux(lm)	Luminous Efficacy(lm/W)	Power Factor(pf)	CRI (Ra)	IP Rating
UPD2GLL1153	3000K, Black, Black, إضاءة نازلة داون لايت	15	1200	80	>0.5	>80	20

TECHNICAL INFORMATION

Frequency(Hz)	50
Input Voltage(VAC)	220-260
Life Span(Hrs)	25000
Sensor	No
Product Face Size (mm)	124x45
Product Weight (gr)	162
Energy Usage	A+
Lumen Maintenance(L70)	1200

PHOTOMETRIC DIAGRAMS

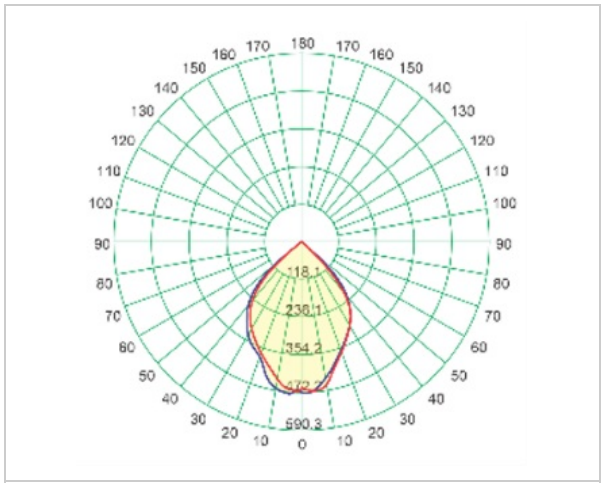

Beam angle / polar diagram

DIMENSION DRAWINGS

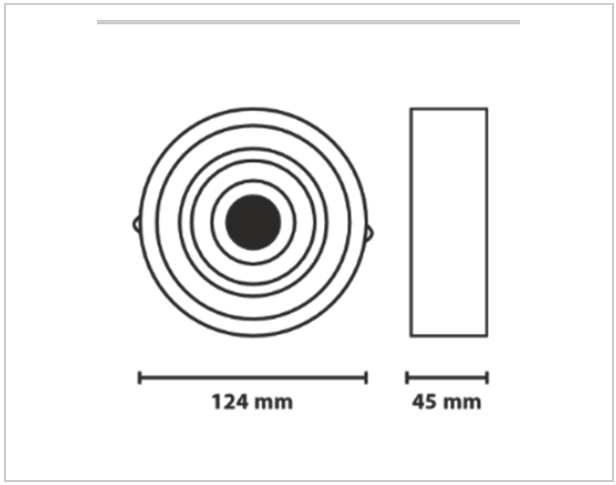

GENERAL INFORMATION

Body Material	Iron
Diffuser	PC
Mounting Type	Recessed
Cut Size	100

APPLICATION AREAS

- Architectural Materials Showroom — Sample consultation islands, finish comparison tables.
- Retail Store — Product display tables, demonstration counters, checkout counters.
- Hotel — Reception counters, lobby display tables, lounge seating areas