





WALL LIGHT 60W KANDOVAN WHITE OMILEX

OVERVIEW

This round bulkhead wall light is a durable and efficient lighting solution for both indoor and outdoor use. With an IP65 rating, it is well-protected against dust and moisture.

PRODUCT VARIANTS & TECHNICAL DATA

Code	Type / Description	Wattage(W)	Luminous Efficacy(lm/W)	Power Factor(pf)	Beam Angle	CRI (Ra)	IP Rating
OPW1W110603	2700K, ROUND, Frosted, إضاءة جدارية	60	90	>0.5	150°	>80	65

TECHNICAL INFORMATION

Frequency(Hz)	50
Input Voltage(V)	220-260
Life Span(Hrs)	15000
IK	
Surge Protection(KV)	
Protection Class	
SDCM	
Sensor	No
Ambient Temperature(Ta)	-20 , +50
Operating Temperature	-20 , +50
UGR	
Product Face Size (mm)	218*67 268*143*67
Product Weight (gr)	250
Energy Usage	A
Lumen Maintenance(lm)	

DIMENSION DRAWINGS

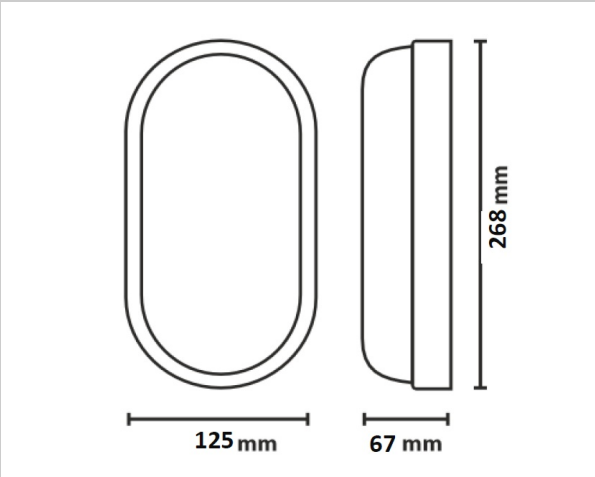

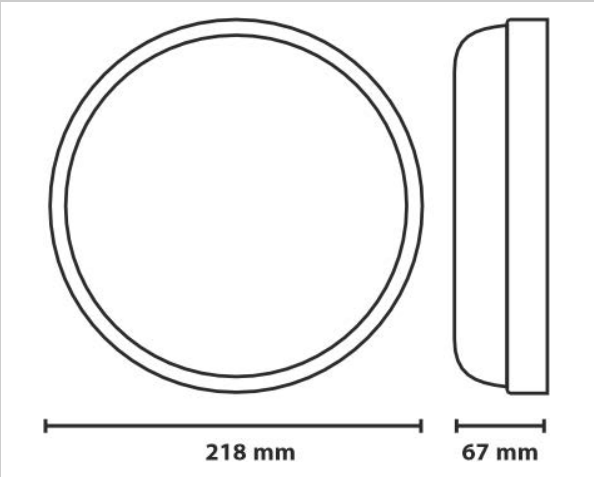

GENERAL INFORMATION

Body Material	PP
Diffuser	
Reflector	
Mounting Type	Wall Mounted
Cut Size	
Driver Brand	
Chip Brand	
LED Type	

APPLICATION AREAS

- Schools
- Car Parking
- Warehouses
- Residential Building
- Commerical Buildings
- Garages and Workshops
- Industrial & Storage Facilities

ISO 9001:2005 ISO 14001:2015 CE