



SPOTLIGHT 8W MR16 CLEAR LUMINATION

OVERVIEW

Features:

- Warm and cool light options available
- High color Rendering Index

PRODUCT VARIANTS & TECHNICAL DATA

Code	Type / Description	Wattage(W)	Total Luminous Flux(lm)	Luminous Efficacy(lm/W)	Beam Angle	CRI (Ra)	Power Factor(pf)	IP Rating
ULSMC000083	2700K, إضاءة نازلة سبوت لايت	8	640	80	220°	>70	>0.5	20

TECHNICAL INFORMATION

Frequency(Hz)	50
Input Voltage(V)	220-260
Life Span(Hrs)	25000
IK	
Surge Protection(KV)	
Protection Class	
SDCM	<6
Sensor	No
Ambient Temperature(Ta)	
Operating Temperature	
UGR	
Product Face Size (mm)	50*53
Product Weight (gr)	24
Energy Usage	A+
Lumen Maintenance(lm)	640

APPLICATION AREA

Schools	
Car Parking	
Warehouses	
Residential Building	
Commerical Buildings	

PHOTOMETRIC DIAGRAMS

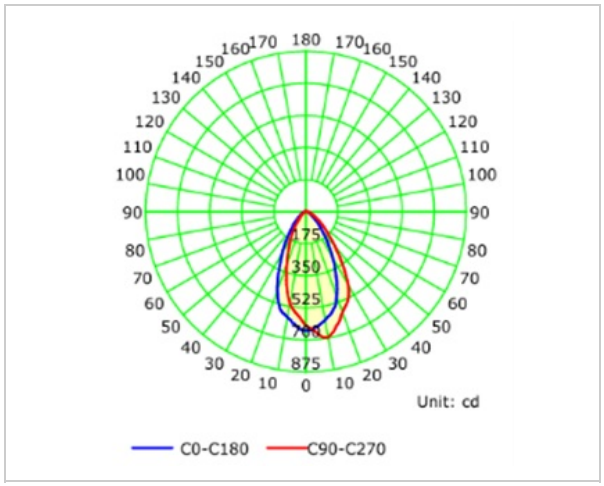

Beam angle / polar diagram

DIMENSION DRAWINGS

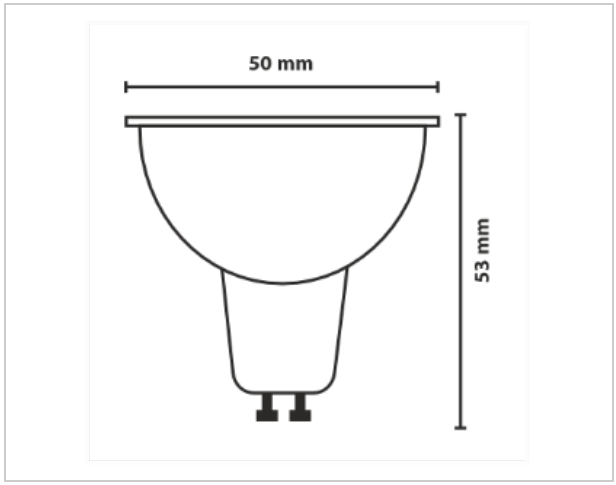

GENERAL INFORMATION

Body Material	PA
Diffuser	PC
Reflector	
Mounting Type	Socket
Cut Size(mm)	
Driver Brand	
Chip Brand	
LED Type	

2 YEARS GUARANTEE
ISO 9001:2005
ISO 14001:2015
CE