



WALL LIGHT OL81373 BLACK LUMINATION

OVERVIEW

IP65-rated LED wall luminaire suitable for exterior architectural lighting. Designed to withstand dust and water exposure while maintaining consistent light output.

PRODUCT VARIANTS & TECHNICAL DATA

Code	Type / Description	Wattage(W)	CRI (Ra)	Power Factor(pf)	IP Rating
UDB1LL81373	إضاءة جدارية	2*3	>80	>0.5	65

TECHNICAL INFORMATION

Frequency(Hz)	50
Input Voltage(V)	220-260
Life Span(Hrs)	25000
IK	
Surge Protection(KV)	2.5
Protection Class	
SDCM	0.6
Sensor	No
Ambient Temperature(Ta)	-20 , +50
Operating Temperature	-20 , +50
UGR	
Product Face Size (mm)	140*60*80
Product Weight (gr)	247
Energy Usage	A
Lumen Maintenance(lm)	

DIMENSION DRAWINGS

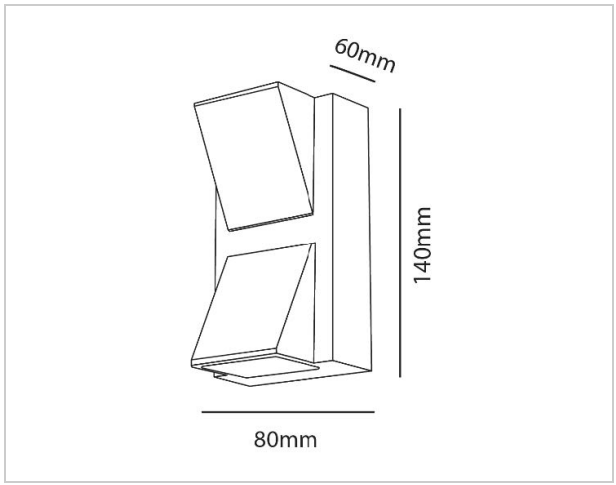

GENERAL INFORMATION

Body Material	Aluminum
Diffuser	
Reflector	
Mounting Type	Wall Mounted
Cut Size(mm)	
Driver Brand	
Chip Brand	
LED Type	

APPLICATION AREAS

- Schools
- Car Parking
- Warehouses
- Residential Building
- Commerical Buildings
- Garages and Workshops
- Industrial & Storage Facilities