



EXPLOSION PROOF HIGH BAY LIGHT 200W EX-S SERIES ZONE 1 LOOX

OVERVIEW

A robust lighting solution designed for hazardous and demanding industrial environments where explosive gas atmospheres may occasionally occur during normal operation. It provides dependable illumination to improve visibility and support safer operations. Its main advantage is reliable performance under critical operating conditions, making it suitable for designated Zone 1 areas across oil, gas, petrochemical and offshore facilities.

PRODUCT VARIANTS & TECHNICAL DATA

Code	Type / Description	Wattage(W)	Total Luminous Flux(lm)	Luminous Efficacy(lm/W)	CRI (Ra)	IP Rating	Zone
LIEHS1G2005	5000k, Gray, إضاءة مقاومة للإنفجارات	200W	26000	130	>70	>0.95	1

TECHNICAL DATA

Frequency	50/60
Input Voltage	200-250
IK	08/10
Ambient temperature(Ta)	20°C~+50°C T6 -20°C~+40°C T6
Product Face Size (mm)	500x470x400mm/ 500x470x400mm
Product Weight (gr)	20200/20550
Lumen Maintenance	L70> 150,000
Power Factor	>0.95
Beam Angle	40°/60°/90°/120°/T2/T3/T5

MATERIALS / TYPE

Body	Aluminum alloy ADC12
Diffuser	Tempered glass; Flat (standard)/Convex (Optional)
Mounting Type	Stanchion 25°, Stanchion 90°, Pendant, Bracket

INSTRUCTION

Instruction Manual	

DIMENSION DRAWINGS

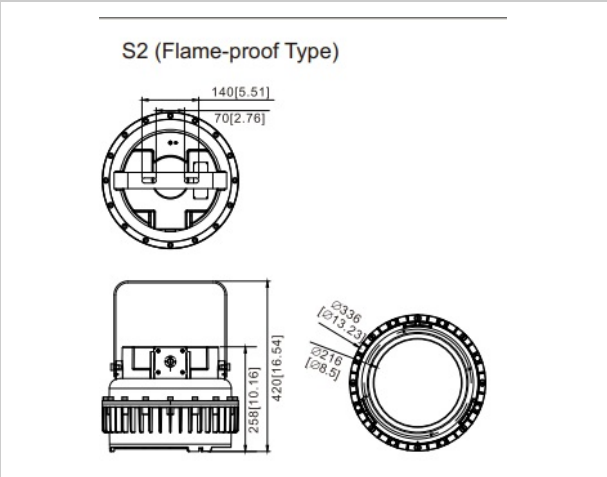

APPLICATION AREAS

- Oil & Gas Processing Facilities: Designated Zone 1 areas around pumps, compressors, valves and sampling points
- Refineries & Petrochemical Plants: Designated Zone 1 process skids, transfer points and vented equipment
- Offshore Platforms: Designated Zone 1 process modules, wellhead areas and fuel-handling points



