

COB SPOTLIGHT 8W BLACK LOOX

OVERVIEW

Features:

• High-performance LED spotlight designed for energy efficiency and long lifespan. Compact and modern design, suitable for residential and commercial spaces.

PRODUCT VARIANTS & TECHNICAL DATA

Code	Type / Description	Wattage(W)	Total Luminous Flux(lm)	Luminous Efficacy(lm/W)	Power Factor(pf)	Beam Angle	CRI (Ra)	IP Rating
LPS100L0083	2700K, إضاءة نازلة سبوت لايت	8	760	95	>0.8	60°	>80	20

TECHNICAL INFORMATION

Frequency(Hz)	50
Input Voltage(V)	180-265
Life Span(Hrs)	30000
IK	
Surge Protection(KV)	
Protection Class	
SDCM	<6
Sensor	No
Ambient Temperature(Ta)	
Operating Temperature	
UGR	
Product Face Size (mm)	75*25
Product Weight (gr)	75
Energy Usage	A+
Lumen Maintenance(lm)	760

PHOTOMETRIC DIAGRAMS

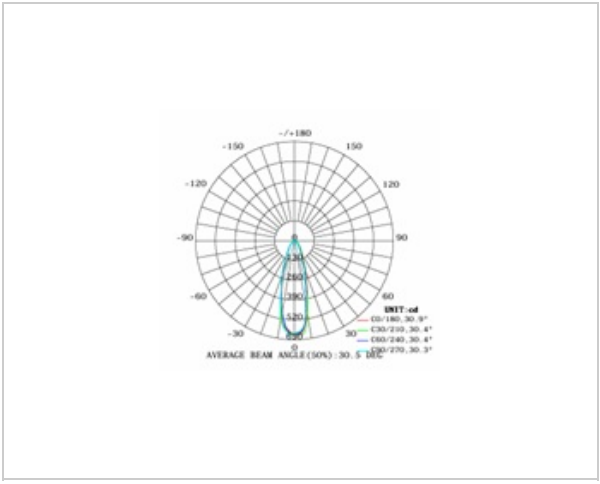

Beam angle / polar diagram

DIMENSION DRAWINGS

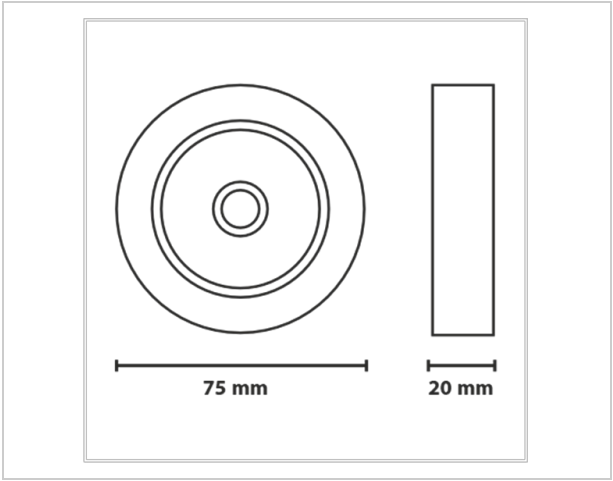

GENERAL INFORMATION

Body Material	Aluminium
Diffuser	PC
Reflector	
Mounting Type	Bracket
Cut Size	
Driver Brand	
Chip Brand	
LED Type	

APPLICATION AREAS

- Schools
- Car Parking
- Warehouses
- Residential Building
- Commerical Buildings