



COB DOWNLIGHT 15W LUMINATION

OVERVIEW

A round recessed LED fixture that directs light downward onto selected surfaces. The reflector helps concentrate light where it’s needed, while the flush trim keeps the ceiling uncluttered. It suits retail displays, hospitality counters, and residential accent lighting.

TECHNICAL INFORMATION

Frequency(Hz)	50-60
Input Voltage(VAC)	220-260
Life Span(Hrs)	25000
Sensor	No
Ambient temperature(Ta)	-20° , +50°
Operating temperature	-20° , +50°
Product Face Size (mm)	165x45
Product Weight (gr)	160
Energy Usage	A+
Lumen Maintenance(lm)	1050

DIMENSION DRAWINGS

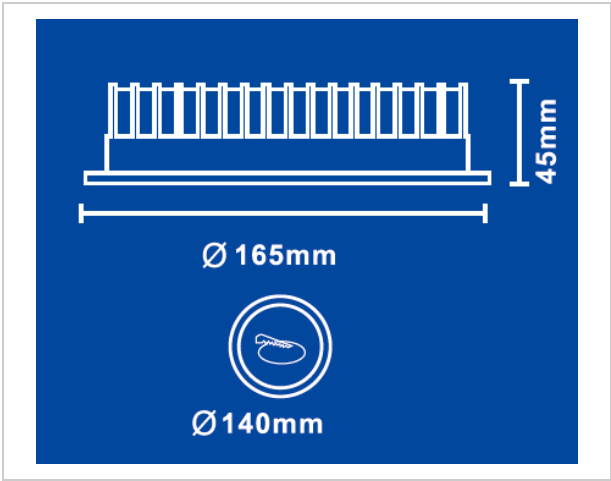

GENERAL INFORMATION

Body Material	Die-Cas Aluminum
Diffuser	PC
Mounting Type	Recessed
Cut Size	140
LED Type	COB

APPLICATION AREAS

- Retail Store — Merchandise display tables, display plinths, checkout counters.
- Hotel — Reception counters, lobby display tables, guest-room luggage benches
- Residential — Entryway consoles, kitchen islands, decorative display niches.