



WATERPROOF LINEAR LIGHT 30W IP65 LUMINATION

OVERVIEW

A Waterproof Linear Light 30W IP65 is a durable, energy-efficient LED fixture designed to resist dust and water,
making it ideal for outdoor and damp environments

PRODUCT VARIANTS & TECHNICAL DATA

Code	Type / Description	Wattage(W)	Total Luminous Flux(lm)	Luminous Efficacy(lm/W)	Power Factor(pf)	Beam Angle	CRI (Ra)	IP Rating
UKN06IP0306	6500K, إضاءة خطية	30	3000	100	>0.5	120°	>70	65

TECHNICAL INFORMATION

Frequency(Hz)	50
Input Voltage(V)	220-260
Life Span(Hrs)	20000
SDCM	4>
Sensor	No
Ambient Temperature(Ta)	-20° , +50°
Operating Temperature	-20° , +50°
Product Face Size (mm)	600*69*40
Product Weight (gr)	166
Energy Usage	A
Lumen Maintenance(lm)	3000

DIMENSION DRAWINGS

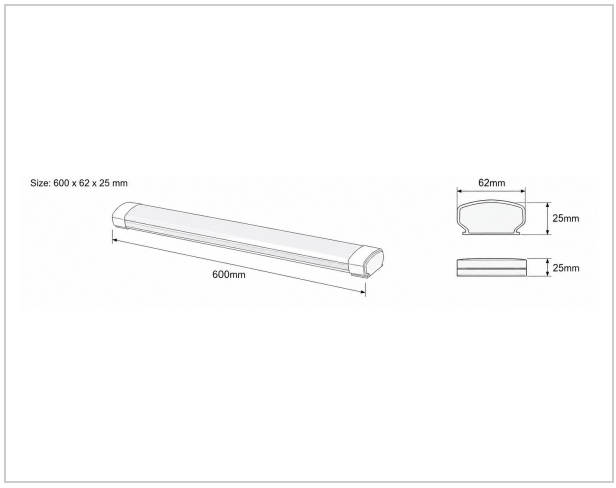

GENERAL INFORMATION

Body Material	PC
Mounting Type	Surface

APPLICATION AREAS

- Schools
- Car Parking
- Warehouses
- Residential Building
- Commerical Buildings
- Garages and Workshops
- Industrial & Storage Facilities






