







HANGING LINEAR LIGHT INDUSTRIAL SERIES 50W LOOX

OVERVIEW

Industrial hanging linear lights are long LED light fixtures that hang from the ceiling and provide uniform, bright illumination over wide areas. They are commonly used in large spaces like factories, warehouses, workshops, and commercial buildings where strong, even lighting is needed for work and safety.

Places we use the Items

- General office lighting
- Workstations and desk areas
- Open-plan offices
- Conference and meeting rooms

- Co-working spaces
- Reception and lobby areas
- Above long tables or bench desks
- Creative studios and design offices
- Task lighting with uniform illumination
- Modern and industrial-style office interiors

TECHNICAL INFORMATION

Frequency(Hz)	50
Input Voltage(V)	180-265
Life Span(Hrs)	70000
IK	
Surge Protection(KV)	3
Protection Class	
SDCM	3>
Sensor	Optional
Ambient Temperature(Ta)	-20° , +50°
Operating Temperature	-20° , +50°
UGR	
Product Face Size (mm)	1500*76*70
Product Weight (gr)	
Energy Usage	
Lumen Maintenance(lm)	9750

INSTRUCTION

Instruction Manual	

DIMENSION DRAWINGS

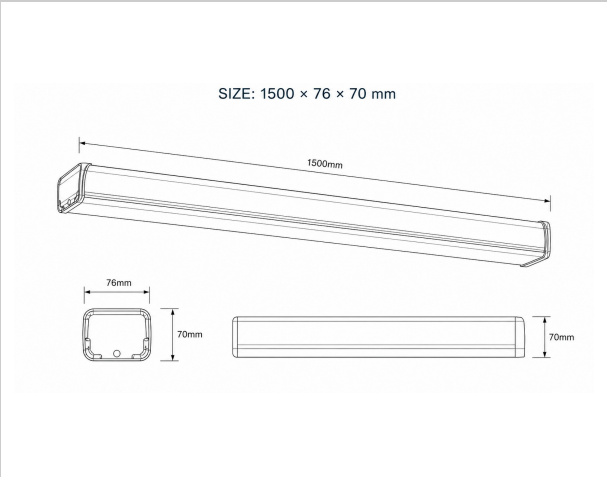

GENERAL INFORMATION

Body Material	Glass + Metal Holder
Diffuser	
Reflector	
Mounting Type	Surface
Cut Size	
Driver Brand	
Chip Brand	
LED Type	

APPLICATION AREAS

- Car Parking
- Warehouses
- Residential Building
- Commerical Buildings
- Garages and Workshops
- Industrial & Storage Facilities

ISO 9001:2005 CE EAC

ISO 14001:2015 RoHS