





STEP LIGHT WHITE 5W LOOX

OVERVIEW

PRODUCT VARIANTS & TECHNICAL DATA

Code	Type / Description	Wattage(W)	Total Luminous Flux(lm)	Luminous Efficacy(lm/W)	Power Factor(pf)	Beam Angle	CRI (Ra)	IP Rating
LDSW0000053	3000K	5	250	50	>0.9	90°	>90	65

TECHNICAL INFORMATION

Frequency(Hz)	50
Input Voltage(V)	185-265
Life Span(Hrs)	50000
IK	
Surge Protection(KV)	
Protection Class	
SDCM	
Sensor	No
Ambient Temperature(Ta)	-20° , +50°
Operating Temperature	-20° , +50°
UGR	
Product Face Size (mm)	145*70*55
Product Weight (gr)	
Energy Usage	A+
Lumen Maintenance(lm)	250

DIMENSION DRAWINGS

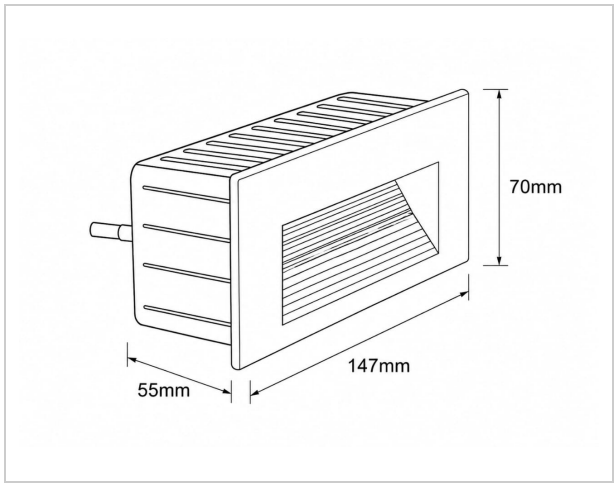

GENERAL INFORMATION

Body Material	Aluminum
Diffuser	
Reflector	
Mounting Type	Recessed
Cut Size	136*65
Driver Brand	
Chip Brand	Osram
Light Source	
Cable & Gland Type	

APPLICATION AREAS

- Hotel and Resorts
- Parking areas
- Villa Walkways
- Garages and Workshops
- Landscape lighting
- Commerical and Resindential Entrances
- Mosques & landmarks
- Building façades
- Industrial & Storage Facilities