







COB SPOTLIGHT 8W WHITE LUMINATION

OVERVIEW

Features:

• High-performance LED spotlight designed for energy efficiency and long lifespan. Compact and modern design, suitable for residential and commercial spaces.

PRODUCT VARIANTS & TECHNICAL DATA

Code	Type / Description	Wattage(W)	Total Luminous Flux(lm)	Luminous Efficacy(lm/W)	Power Factor(pf)	Beam Angle	CRI (Ra)	IP Rating
UPS100W0083	2700K, إضاءة نازلة سبوت لايت	8	640	80	>0.5	60°	>80	20

PHOTOMETRIC DIAGRAMS

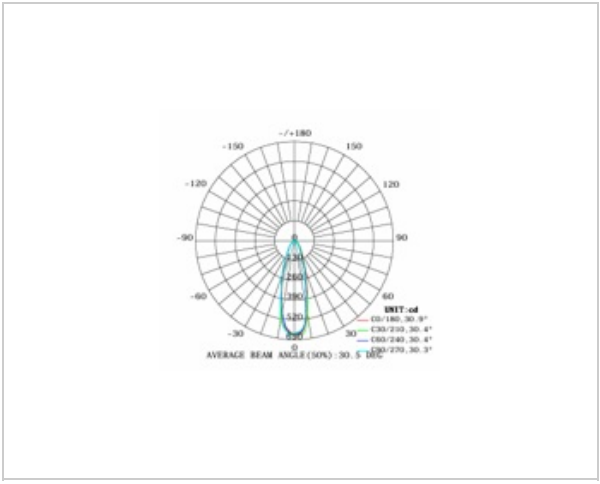

Beam angle / polar diagram

DIMENSION DRAWINGS

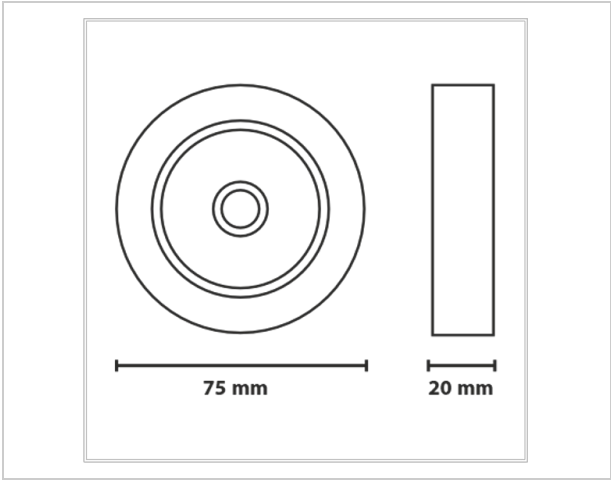

2 YEARS GUARANTEE

ISO 9001:2005

ISO 14001:2015

CE