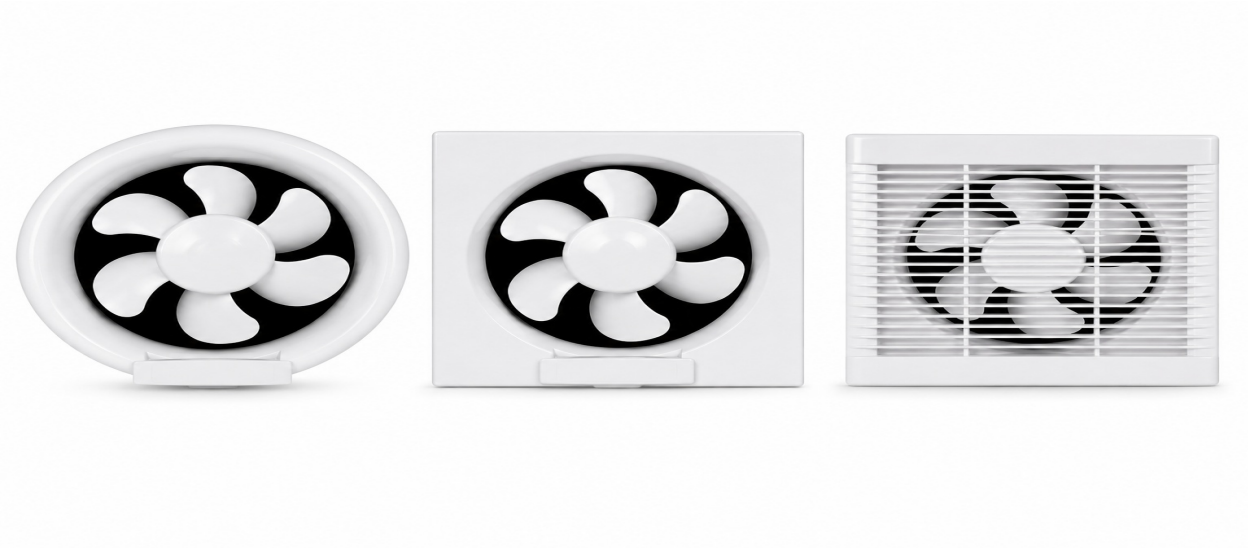



EXHAUST FAN 20W 8" ROUND AUTO-SHUTTER LUMINATION

OVERVIEW

High-performance axial exhaust fan designed for efficient air extraction in kitchens, and other residential or commercial ventilation applications. Features quiet operation, durable construction, and an auto-shutter mechanism to prevent dust, insects, and backdraft airflow when the fan is not in use.

PRODUCT VARIANTS & TECHNICAL DATA

Code	Type / Description	Frequency(Hz)	Current(mA)	Material	Mounting	Blade Width(mm)	Energy Usage
UEEH08120A1	مراوح	50/60	90	PP	Window	200	A+

DIMENSION DRAWINGS

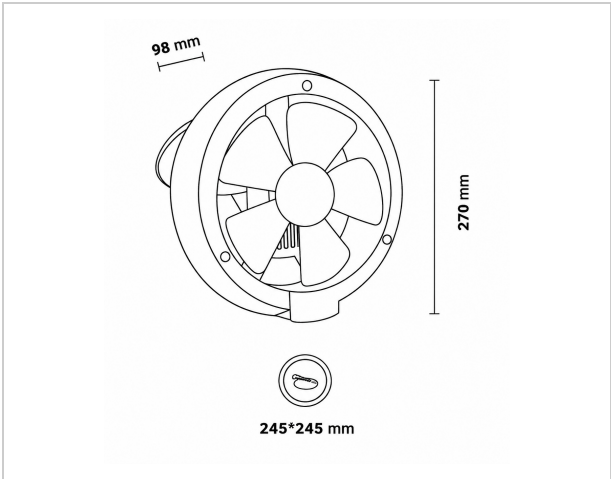

GENERAL INFORMATION

Wattage(W)	20
Product Size(inch)	6
Lighting	No
Coil Material	Aluminum
Body Material	PP
Bearing	1
Product Weight(gr)	800







