



PANEL 10W ROJA LOOX

OVERVIEW

Features:

*Ultra-slim design for modern interior ceilings.

*Uniform light distribution without glare or flickering.

PRODUCT VARIANTS & TECHNICAL DATA

Code	Type / Description	Wattage(W)	Total Luminous Flux(lm)	Luminous Efficacy(lm/W)	Power Factor(pf)	Beam Angle	CRI (Ra)	IP Rating
LPP1R110103	2700K, ROUND, إضاءة لوحية	10	900	90	>0.5	180°	>70	20

TECHNICAL DATA

Frequency	50
Voltage	185-265
Product Face Size (mm)	100*28
Product Weight (gr)	Round: 110 Square: 140
Life time	25000
Warranty	3 years
IK	
Surge Protection	
Protection class	
SDCM	<6
Sensor	No
Ambient temperature(Ta)	
UGR	

MATERIALS / TYPE

Body	Aluminium
Diffuser	PS
Reflector	
Mounting Type	Recessed
Driver Brand	
Chip Brand	Sanan
LED Type	

DIMENSION DRAWINGS

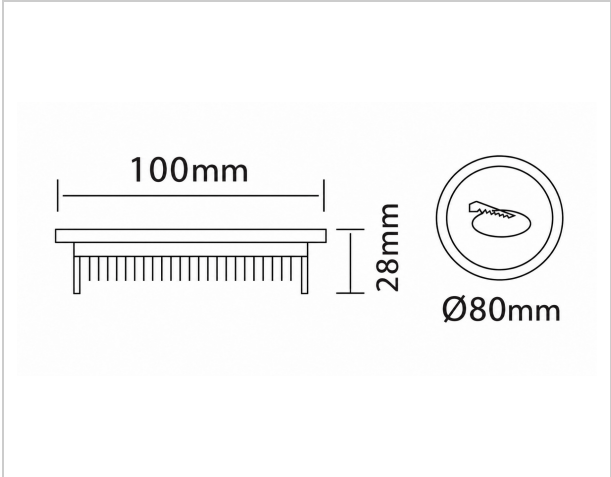

APPLICATION AREAS

- Schools
- Car Parking
- Warehouses
- Garages and Workshops
- Industrial & Storage Facilities