



MAGNETIC DIAMOND PENDANT 10W M30 SERIES SURFACE LOOX

OVERVIEW

A decorative pendant luminaire designed for magnetic track systems, featuring a refined smoked-glass shade and distinctive crystal-style light element. It provides soft, comfortable ambient illumination while adding an elegant visual focal point to the interior. Its main advantage is the combination of flexible magnetic installation and sophisticated decorative design. Suitable for residential, hospitality, retail, commercial, and decorative interior applications.

PRODUCT VARIANTS & TECHNICAL DATA

Code	Type / Description	Wattage(W)	Luminous Efficacy(lm/W)	Power Factor(pf)	Beam Angle	CRI (Ra)	IP Rating
LIMI30LS073	3000K, Black, إضاءة مغناطيسية	10W	60	>0.5	120°	>80	20

TECHNICAL INFORMATION

Frequency(Hz)	50-60
Input Voltage(V)	48V
Life Span(Hrs)	30000
Ambient Temperature(Ta)	-20° C, +50° C
Operating Temperature	-20° C, +50° C
Product Face Size (mm)	200*140
Product Weight (gr)	490.7
Energy Usage	A+

INSTRUCTION

Instruction Manual	

DIMENSION DRAWINGS

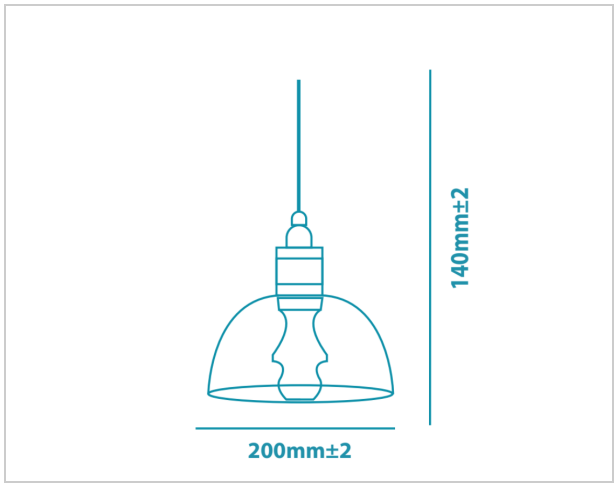

GENERAL INFORMATION

Body Material	ALU+ACCRYLIC
Mounting Type	Surface

APPLICATION AREAS

- Retail & Boutiques: display tables, feature displays, premium product zones
- Residential Building: Dining spaces, majlis areas , decorative ceiling compositions
- Decorative Projects: Feature ceilings, architectural compositions, interior accent-lighting arrangements

