





STREET LIGHT 80W SR LOOX-PROJECT

OVERVIEW

A pole-mounted outdoor luminaire designed to provide reliable illumination across roads and open public areas. It distributes light evenly over the target surface, improving visibility and supporting safer movement after dark. Its practical design combines efficient area coverage with a clean installation, making it suitable for urban, residential and commercial outdoor lighting.

PRODUCT VARIANTS & TECHNICAL DATA

Code	Type / Description	Wattage(W)	Total Luminous Flux(lm)	Luminous Efficacy(lm/W)	Power Factor(pf)	Beam Angle	CRI (Ra)	IP Rating
LIF1S100804	4000K, اضاءة الشارع	80	10000	125	>0.95	70*150°	>70	66

TECHNICAL INFORMATION

Frequency(Hz)	50-60
Input Voltage(V)	100-277
Life Span(Hrs)	100000
Surge Protection(KV)	10
Sensor	No
Ambient Temperature(Ta)	-20° to +50°
Operating Temperature	-20° to +50°
Product Face Size (mm)	610*245*98.5
Energy Usage	A+

DIMENSION DRAWINGS

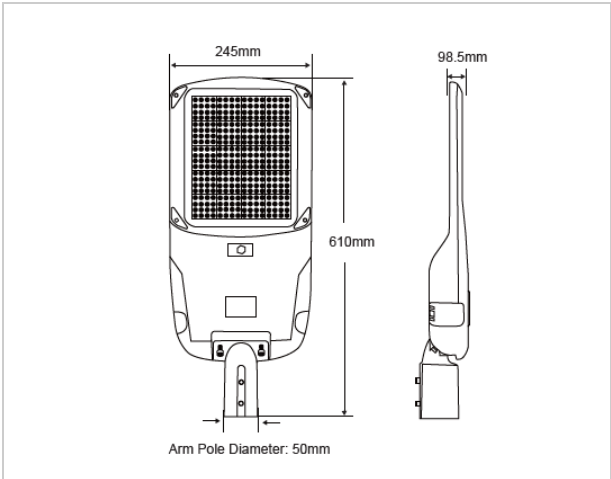

GENERAL INFORMATION

Body Material	Aluminum
Mounting Type	Pole
Cable & Gland Type	:3*1M2*30CM

APPLICATION AREAS

- Residential Areas: Community streets, villa access roads and internal roads
- Urban Areas: Local roads, secondary streets and pedestrian routes
- Commercial & Industrial Areas: Parking lots, warehouse yards and facility access roads