



GATE LIGHT SD5903 SERIES LOOX

OVERVIEW

An elegant outdoor pillar lantern featuring a classic design with a durable matte black finish and clear glass panels. Designed to provide decorative ambient lighting while enhancing the architectural appearance of outdoor spaces.

TECHNICAL INFORMATION

Product Face Size (mm)	440*170
Product Weight (gr)	707

INSTRUCTION

Instruction Manual	

DIMENSION DRAWINGS

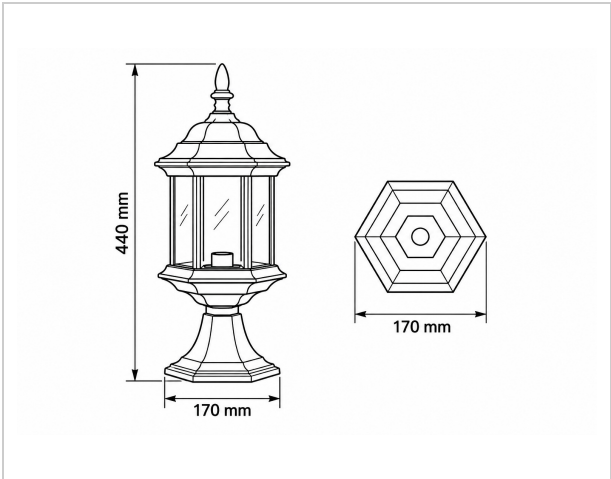

GENERAL INFORMATION

Body Material	Aluminium die-cast
Mounting Type	Surface
Light Source	Bulb - E27

APPLICATION AREAS

- Villa Walkways
- Mosques & landmarks

3 YEARS GUARANTEE