



ADJUSTABLE SURFACE BULKHEAD 3 WATTAGES(8W/12W/18W) IP65 LOOX

OVERVIEW

A durable emergency wall-mounted LED luminaire designed to provide reliable general and backup illumination for circulation and utility areas. It delivers uniform, comfortable light for everyday use while supporting continued visibility during power interruptions through its integrated emergency function. Its main advantage is the combination of robust outdoor protection, efficient performance, and emergency lighting capability in one compact fixture. Suitable for residential common areas, hospitality, and light-industrial environments.

PRODUCT VARIANTS & TECHNICAL DATA

Code	Type / Description	Wattage(W)	Total Luminous Flux(lm)	Luminous Efficacy(lm/W)	Power Factor(pf)	Beam Angle	CRI (Ra)	IP Rating
LPB4L150187	3CCT, ROUND, Black	8/12/18	840-1260-1890	105	>0.9	120°	>80	65

TECHNICAL INFORMATION

Frequency(Hz)	50
Input Voltage(V)	180-265
Life Span(Hrs)	50000
IK	08
SDCM	>5
Ambient Temperature(Ta)	-20℃+85℃
Operating Temperature	-20℃+85℃
Product Face Size (mm)	**ROUND:** 210*61mm **OVAL:** ∅220mm*L105*H58mm
Product Weight (gr)	**ROUND:** 450 **OVAL:** 300
Energy Usage	A+
Lumen Maintenance(lm)	840-1260-1890

INSTRUCTION

Instruction Manual	

PHOTOMETRIC DIAGRAMS

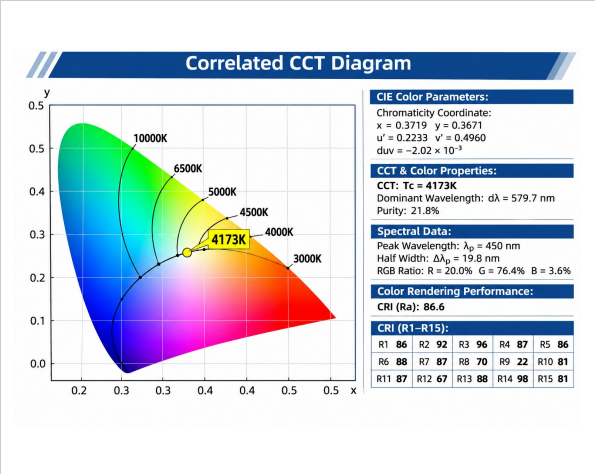

Chromaticity / CCT diagram

DIMENSION DRAWINGS

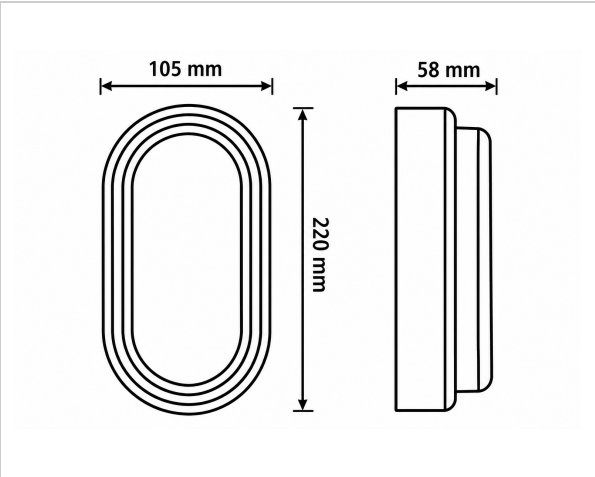

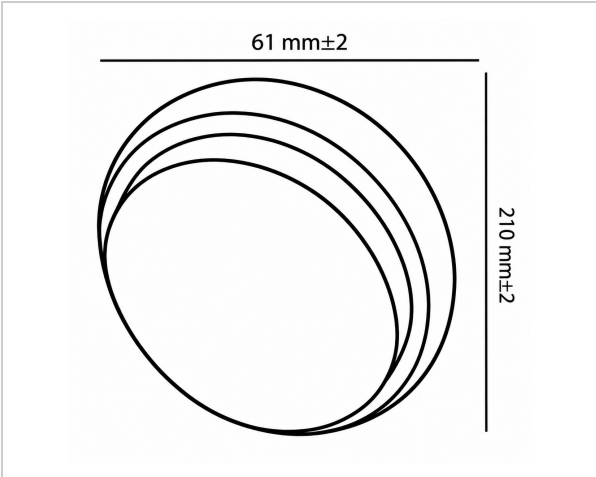

GENERAL INFORMATION

Body Material	Anti-UV PC
Diffuser	Anti-UV PC
Mounting Type	Ceiling - Wall
LED Type	SMD

APPLICATION AREAS

- Retail & Showrooms
- Hotels & Hospitality
- Warehouses
- Residential
- Commerical Buildings
- Garages and Workshops
- Industrial & Storage Facilities