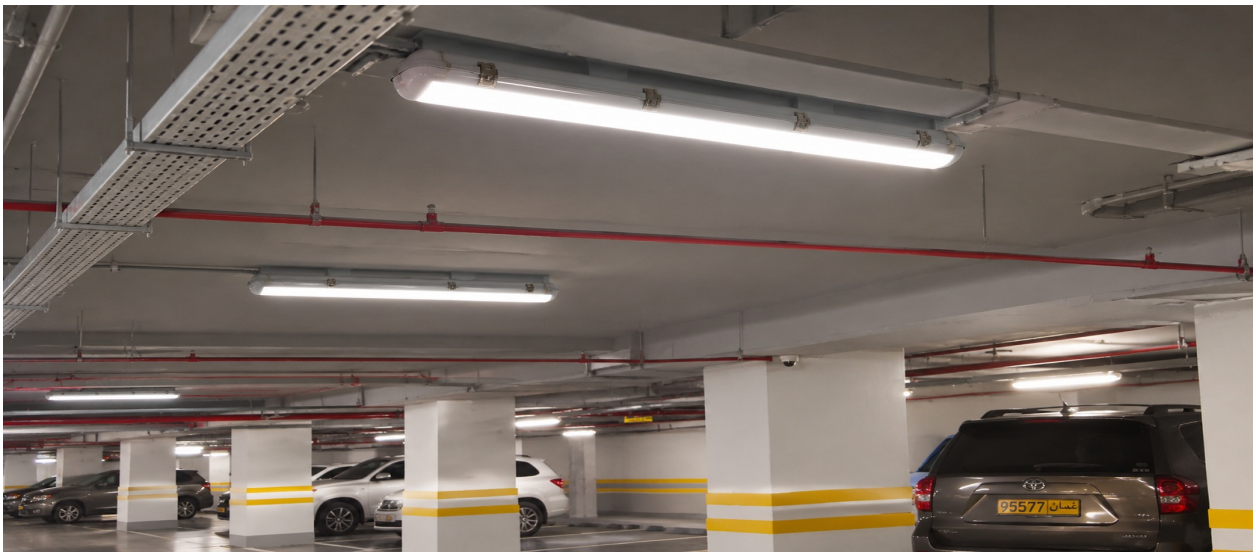



DOUBLE HOUSING WITH CHIPS 40W LOOX PRO

OVERVIEW

The LED Double Housing with Integrated Chip is a durable, energy-efficient lighting fixture designed to provide bright, uniform illumination. Featuring a robust housing, opal diffuser, and secure stainless-steel clips, it offers reliable performance and easy installation. Ideal for parking areas, warehouses, workshops, industrial facilities, and other indoor or sheltered environments.

PRODUCT VARIANTS & TECHNICAL DATA

Code	Type / Description	Wattage(W)	Total Luminous Flux(lm)	Luminous Efficacy(lm/W)	Power Factor(pf)	Beam Angle	CRI (Ra)	IP Rating
LKC12IK0403	3000K	40	4000	100	>0.5	110	>80	65

TECHNICAL INFORMATION

Frequency(Hz)	50
Input Voltage(V)	185-265v
Life Span(Hrs)	30000
Product Face Size (mm)	120*8.5*7.8cm
Product Weight (gr)	1070
Lumen Maintenance(lm)	4000

DIMENSION DRAWINGS

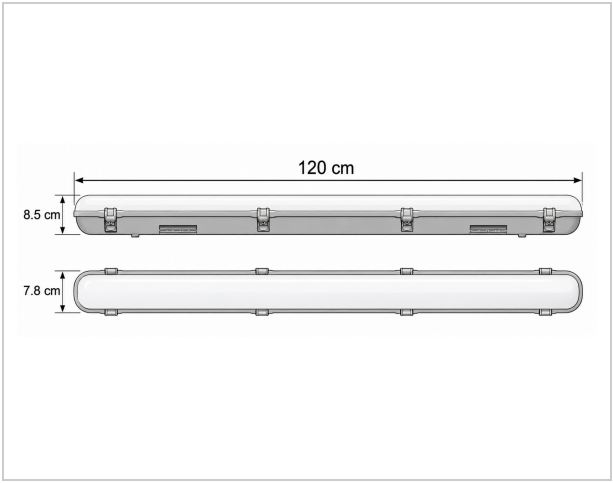

GENERAL INFORMATION

Body Material	High Impact Polystyrene