



MAGNETIC PENDANT LIGHT M30 7W HALO SERIES LOOX

OVERVIEW

The LOOX Halo Series M30 7W Magnetic Pendant Light features a modern, elegant design with a 300 mm diameter and focused downward illumination. Designed for magnetic track systems, it combines decorative aesthetics with practical spotlighting. Ideal for dining areas, living rooms, hotels, restaurants, and commercial interiors, providing a stylish and comfortable lighting solution.

PRODUCT VARIANTS & TECHNICAL DATA

Code	Type / Description	Wattage(W)	Total Luminous Flux(lm)	Power Factor(pf)	Beam Angle	CRI (Ra)	IP Rating
LIMTM30L073	Black, 3000K	7W	280LM	>0.5	120	>90	IP20

TECHNICAL INFORMATION

Frequency	50Hz
Input Voltage	DC48V
Life Span	30000HRS
SDCM	<7
Warranty	3 Years Guarantee
Product Face Size (mm)	300mm*300mm
Energy Usage	A+
Lumen Maintenance	280LM

DIMENSION DRAWINGS

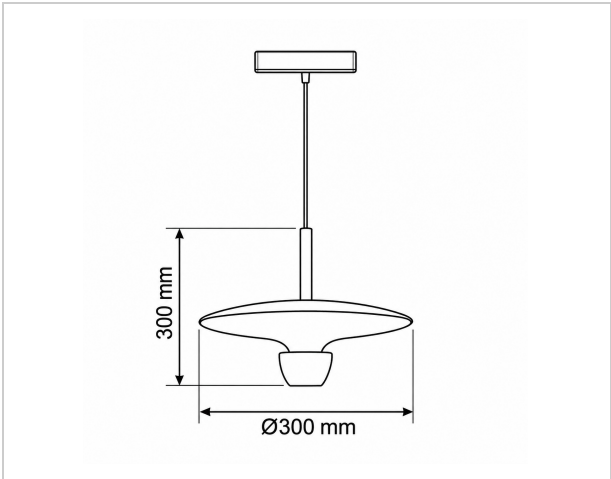

GENERAL INFORMATION

Body Material	Aluminum
Mounting Type	Pendant

APPLICATION AREAS

- Schools
- Car Parking
- Warehouses
- Residential Building
- Commerical Buildings
- Garages and Workshops
- Industrial & Storage Facilities






