



MAGNETIC GRILL LINEAR LIGHT M30 12W LOOX

OVERVIEW

The LOOX M30 12W Magnetic Grill Linear Light features a sleek, ultra-slim design with multiple recessed LED lenses that provide focused, comfortable downward illumination while minimizing glare. Designed for M30 magnetic track systems, it allows easy installation and flexible positioning. Its modern black finish makes it ideal for offices, conference rooms, showrooms, retail spaces, hotels, and residential interiors, delivering efficient lighting with a clean architectural appearance.

PRODUCT VARIANTS & TECHNICAL DATA

Code	Type / Description	Wattage(W)	Total Luminous Flux(lm)	Power Factor(pf)	Beam Angle	CRI (Ra)	IP Rating
LIMGM30L123	Black, 3000K	12W	780lm	0.5	24	>90	IP20

TECHNICAL INFORMATION

Frequency(Hz)	50hZ
Voltage(V)	DC48V
Product Face Size (mm)	220*30*18MM
Life Time(hrs)	30000HRS
SDCM	<7

DIMENSION DRAWINGS

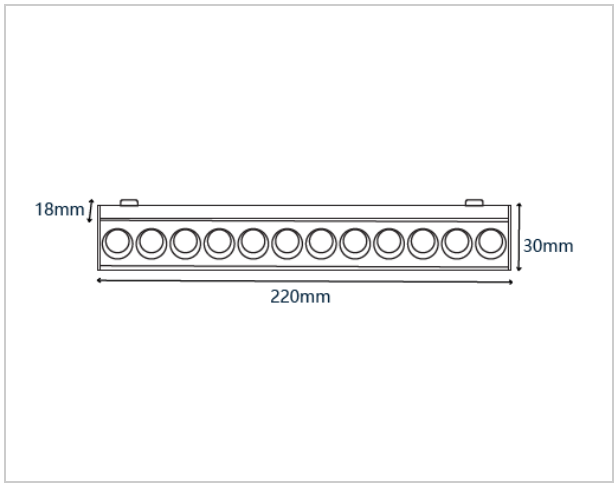

GENERAL INFORMATION

Body Material	Aluminum
Mounting Type	Surface

APPLICATION AREAS

- Schools
- Car Parking
- Warehouses
- Residential Building
- Industrial & Storage Facilities