







ADJUSTABLE SURFACE SPOTLIGHT 2×12W SERIES ARTIVIA - L284 AH1 LOOX PLUS

OVERVIEW

The ARTIVIA Adjustable Surface Spotlight is a compact dual-head luminaire designed to provide flexible, controlled directional lighting. Its two adjustable light heads allow illumination to be directed toward different areas or features, offering greater lighting flexibility from a single surface-mounted fixture. Its clean architectural design makes it suitable for residential, hospitality, retail and commercial interiors.

PRODUCT VARIANTS & TECHNICAL DATA

Code	Type / Description	Wattage(W)	Total Luminous Flux(lm)	Luminous Efficacy(lm/W)	Power Factor(pf)	Beam Angle	CRI (Ra)	IP Rating
LD184ASG244	4000K, Gray, إضاءة نازلة سبوت لايت, Eaglerise Driver	24W	2400	100	>0.5	36°	>90	54

TECHNICAL INFORMATION

Frequency	50-60 Hz
Input Voltage	220-240 VAC
Life Span	50000 H
Protection class	Class II
SDCM	≤ 2
Sensor	No
Ambient temperature(Ta)	-15℃+55℃
Operating temperature	-15℃+45℃
UGR	<17
Product Face Size (mm)	284*100*72
Product Weight (gr)	754
Energy Usage	A+
Lumen Maintenance (L70)	2400

INSTRUCTION

Instruction Manual	

PHOTOMETRIC DIAGRAMS

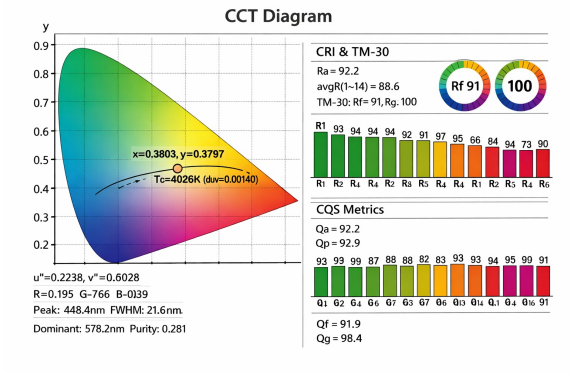

Chromaticity / CCT diagram

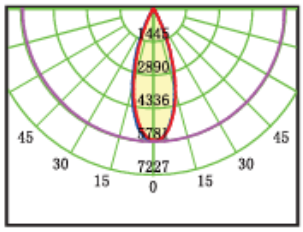

Beam angle / polar diagram

DIMENSION DRAWINGS

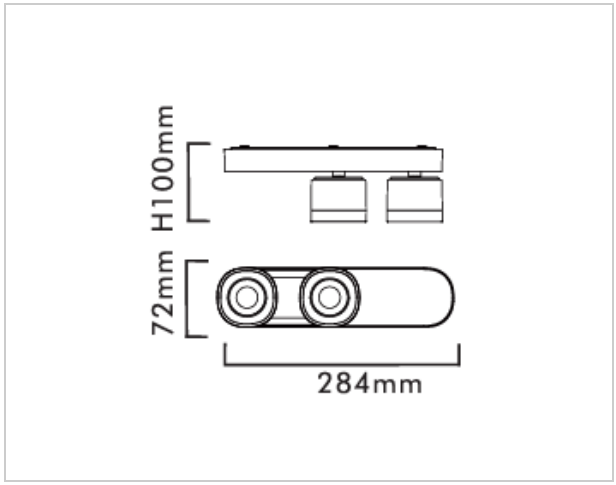

GENERAL INFORMATION

Body Material	Die-Cast Aluminum
Diffuser	PC
Reflector	PC
Mounting Type	Surface
Driver Brand	Eaglerise/Philips
Chip Brand	Osram/Philips
LED Type	COB

APPLICATION AREAS

- Residential Buildings: Entrances, Hallways, Dressing Areas, Feature Walls, Artwork Areas, etc.
- Commercial Buildings: Reception Areas, Display Zones, Waiting Areas, Architectural Features, etc.
- Restaurants & Cafés: Counters, Feature Walls, Entrance Areas, Small Seating Zones, etc.