







ADJUSTABLE SURFACE SPOTLIGHT 12W SERIES ARTIVIA - L174AH1 LOOX PLUS

OVERVIEW

The ARTIVIA Adjustable Surface Spotlight is a compact single-head luminaire designed for controlled directional lighting. Its adjustable light head allows illumination to be aimed toward selected areas, objects or architectural features, providing greater flexibility from a clean surface-mounted fixture. It is well suited to residential, hospitality, retail and commercial interiors where focused and adaptable lighting is required.

PRODUCT VARIANTS & TECHNICAL DATA

Code	Type / Description	Wattage(W)	Total Luminous Flux(lm)	Luminous Efficacy(lm/W)	Power Factor(pf)	Beam Angle	CRI (Ra)	IP Rating
LD184ASG124	4000K, Gray, إضاءة نازلة سبوت لايت, Eaglerise Driver	12W	1200	100	>0.5	36°	>90	54

TECHNICAL INFORMATION

Frequency	50-60 Hz
Input Voltage	220-240 VAC
Life Span	50000 H
Protection class	Class II
SDCM	<2
Sensor	No
Ambient temperature(Ta)	-15℃+55℃
Operating temperature	-15℃+45℃
UGR	<17
Product Face Size (mm)	174*98*72
Product Weight (gr)	400
Energy Usage	A+
Lumen Maintenance (L70)	1200

INSTRUCTION

Instruction Manual	

PHOTOMETRIC DIAGRAMS

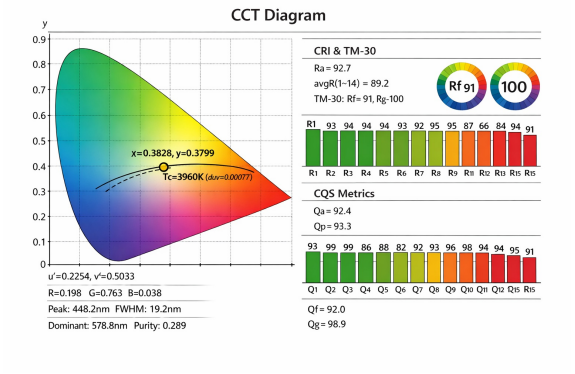

Chromaticity / CCT diagram

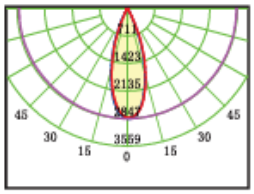

Beam angle / polar diagram

DIMENSION DRAWINGS

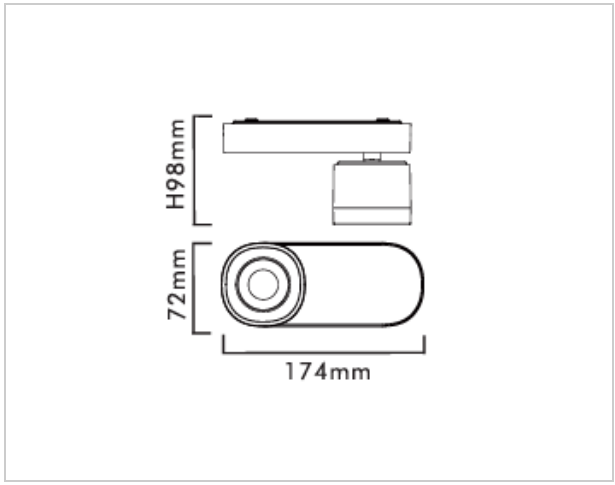

GENERAL INFORMATION

Body Material	Die-Cast Aluminum
Diffuser	PC
Reflector	PC
Mounting Type	Surface
Driver Brand	Eaglerise/Philips
Chip Brand	Osram/Bridgelux
LED Type	COB

APPLICATION AREAS

- Commercial Buildings: Reception Areas, Display Zones, Waiting Areas, Architectural Features, etc.
- Residential Buildings: Entrances, Hallways, Dressing Areas, Feature Walls, Artwork Areas, etc.
- Restaurants & Cafés: Counters, Feature Walls, Entrance Areas, Small Seating Zones, etc.