







DOUBLE PENDANT LIGHT 24W SERIES ARTIVIA - M2 LOOX PLUS

OVERVIEW

The ARTIVIA Double Pendant Light combines two suspended light heads within a single ceiling fixture to provide focused illumination with a clean architectural appearance. Its twin-light design helps define tables, kitchen islands and counters while reducing the need for multiple separate fixtures, making it well suited to residential, hospitality, café and commercial interiors.

PRODUCT VARIANTS & TECHNICAL DATA

Code	Type / Description	Wattage(W)	Total Luminous Flux(lm)	Luminous Efficacy(lm/W)	Power Factor(pf)	Beam Angle	CRI (Ra)	IP Rating
LDH18MSG244	4000K, Gray, إضاءة معلقة, Eaglerise Driver	24W	2400	100	>0.5	36°	>90	54

TECHNICAL INFORMATION

Frequency	50-60 Hz
Input Voltage	220-240 VAC
Life Span	50000 H
Protection class	Class II
SDCM	< 2
Sensor	No
Ambient temperature(Ta)	-15℃+55℃
Operating temperature	-15℃+45℃
UGR	<17
Product Face Size (mm)	284*1015*72
Product Weight (gr)	772
Energy Usage	A+
Lumen Maintenance (L70)	2400

INSTRUCTION

Instruction Manual	

PHOTOMETRIC DIAGRAMS

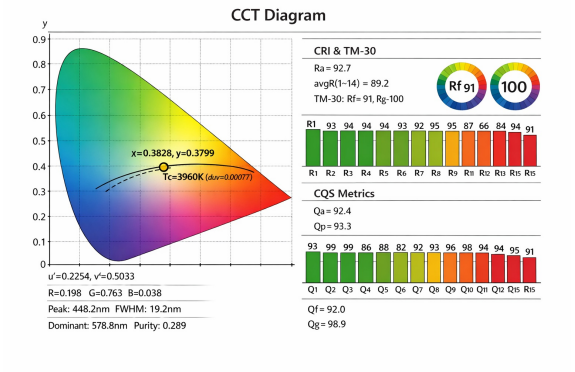

Chromaticity / CCT diagram

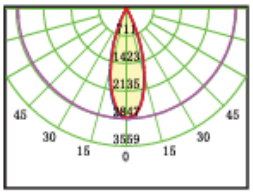

Beam angle / polar diagram

DIMENSION DRAWINGS

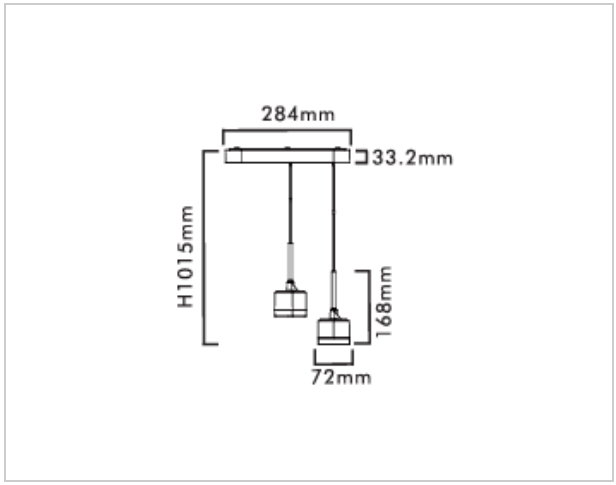

GENERAL INFORMATION

Body Material	Die-Cast Aluminum
Diffuser	PC
Reflector	PC
Mounting Type	Surface
Driver Brand	Eaglerise/Philips
Chip Brand	Osram/Philips
LED Type	COB

APPLICATION AREAS

- Residential Buildings: Dining Tables, Kitchen Islands, etc.
- Restaurants & Cafés: Dining Tables, Café Counters, Bar Counters, Communal Tables, etc.
- Commercial Buildings: Reception Desks, Customer Counters, Waiting-Lounge Tables, Feature Zones, Consultation Areas, etc.