







DOWNLIGHT 15W SERIES ARTIVIA - 100H1 LOOX PLUS

OVERVIEW

The ARTIVIA Recessed Downlight is a compact architectural luminaire designed to provide controlled, comfortable illumination with a clean ceiling appearance. Its recessed optical design helps reduce direct glare and improve visual comfort, making it well suited to hospitality, residential and commercial interiors such as corridors, entrances, reception areas and circulation spaces.

PRODUCT VARIANTS & TECHNICAL DATA

Code	Type / Description	Wattage(W)	Total Luminous Flux(lm)	Luminous Efficacy(lm/W)	Power Factor(pf)	Beam Angle	CRI (Ra)	IP Rating
LD18110G153 LD18110G154	3000K / 4000K, Gray, Down Light, Eaglerise Driver	15W	1400	90	>0.5	36°	>90	54

TECHNICAL INFORMATION

Frequency	50-60 Hz
Input Voltage	220-240 VAC
Life Span	50000 H
Protection class	Class II
SDCM	≤ 3
Sensor	No
Ambient temperature(Ta)	-15℃+55℃
Operating temperature	-15℃+45℃
UGR	<17
Product Face Size (mm)	Ø114 × H70 mm
Product Weight (gr)	270
Energy Usage	A+
Lumen Maintenance (L70)	1500

INSTRUCTION

Instruction Manual	

PHOTOMETRIC DIAGRAMS

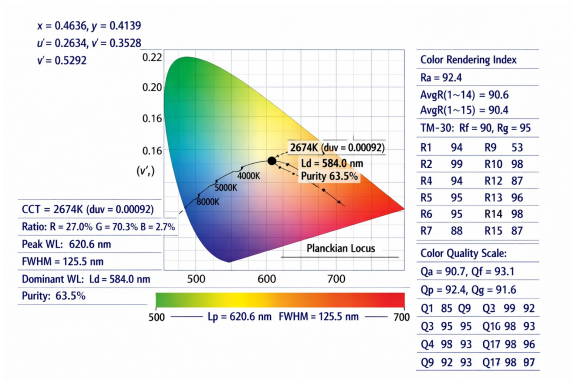

Chromaticity / CCT diagram

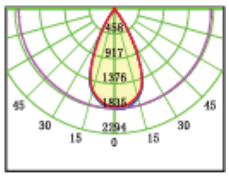

Beam angle / polar diagram

DIMENSION DRAWINGS

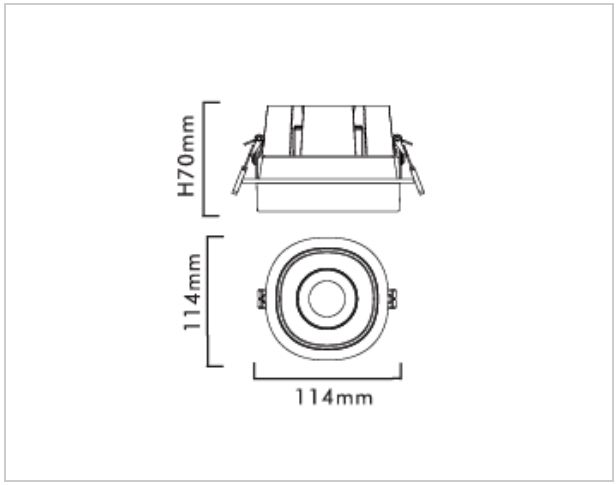

GENERAL INFORMATION

Body Material	Die-Cast Aluminum
Diffuser	PC
Reflector	PC
Mounting Type	Recessed
Cut Size	Φ100mm
Driver Brand	Eaglerise/Philips
Chip Brand	Osram/Bridgelux
LED Type	COB

APPLICATION AREAS

- Hospitality: Hotel Corridors, Lift Lobbies, Reception Areas, Waiting Zones, Guest-Floor Circulation
- Residential Building: Entrances, Hallways, Dressing Areas, Feature Walls, Artwork Areas, etc.
- Commercial Buildings: Reception Areas, Entrance Halls, Internal Corridors, Waiting Areas, Lift Lobbies