





ADJUSTABLE SPOTLIGHT 12W SERIES ARTIVIA - 075AH1 LOOX PLUS

OVERVIEW

The ARTIVIA Adjustable Spotlight is a compact directional luminaire designed for precise accent and feature lighting. Its adjustable design allows the light to be redirected toward selected objects, surfaces or architectural details, providing greater flexibility as displays and interior layouts change. It is well suited to retail, galleries, hospitality and commercial feature areas where controlled visual emphasis is required.

PRODUCT VARIANTS & TECHNICAL DATA

Code	Type / Description	Wattage(W)	Total Luminous Flux(lm)	Luminous Efficacy(lm/W)	Power Factor(pf)	Beam Angle	CRI (Ra)	IP Rating
LD185A0G123 LD185A0G124 LD185AEG126	3000K / 4000K / 6500K, Gray, Spot Light, Eaglerise Driver	12W	1200	100	>0.5	24°	>90	54

TECHNICAL INFORMATION

Frequency	50-60 Hz
Input Voltage	220-240 VAC
Life Span	50000 H
Protection class	Class II
SDCM	<2
Ambient temperature(Ta)	-15℃+55℃
Operating temperature	-15℃+45℃
UGR	<17
Product Face Size (mm)	72*72*95
Product Weight (gr)	264
Energy Usage	A+
Lumen Maintenance (L70)	1200

INSTRUCTION

Instruction Manual	

PHOTOMETRIC DIAGRAMS

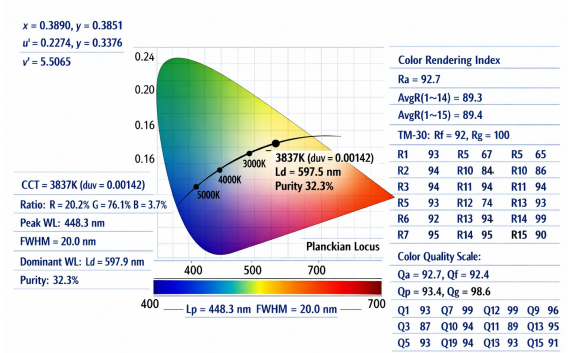

Chromaticity / CCT diagram

DIMENSION DRAWINGS

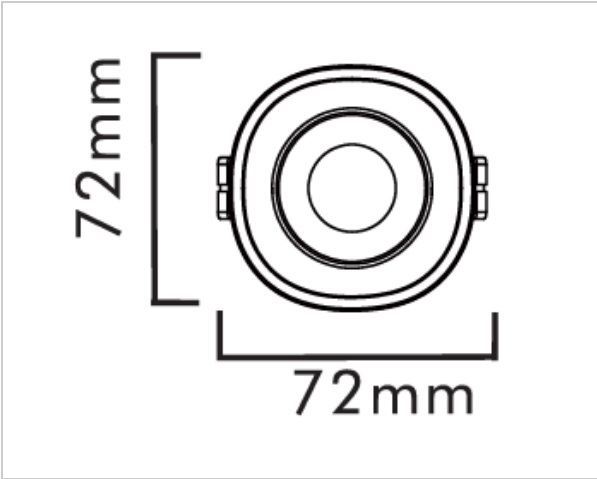

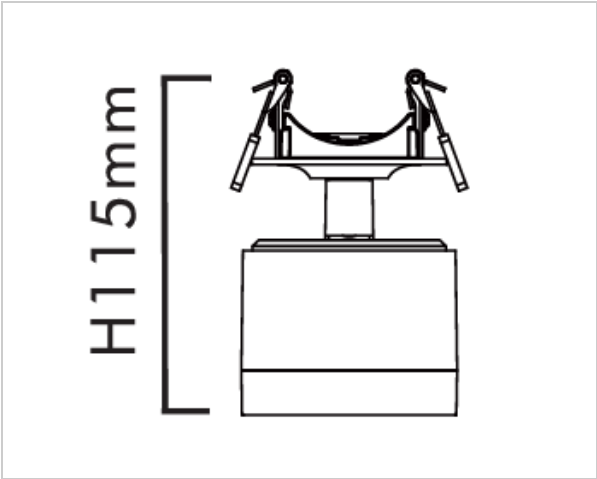

GENERAL INFORMATION

Body Material	Die-Cast Aluminum
Diffuser	PC
Reflector	PC
Mounting Type	Recessed
Cut Size	Φ72mm
Driver Brand	Eaglerise/Philips
Chip Brand	Osram/Bridgelux
LED Type	COB

APPLICATION AREAS

- Restaurants & Cafés: Artwork، Feature Walls، Decorative Tables، Menu/Display Features
- Museums / Galleries: Artwork، Sculptures، Temporary Exhibitions
- Retail Boutiques: Cashier Counters, Product Display Tables, Boutique Feature Areas, Consultation Counters, Promotional Displays,

