







SURFACE SPOTLIGHT 12W SERIES ARTIVIA - M172H1 LOOX PLUS

OVERVIEW

The ARTIVIA Surface Spotlight is a compact cylindrical luminaire designed to provide controlled, focused illumination with a clean architectural appearance. Its ribbed optical section helps manage light distribution and visual comfort, while the surface-mounted design offers a practical solution where recessed installation is not preferred. It is well suited to retail, hospitality, gallery and commercial feature areas.

PRODUCT VARIANTS & TECHNICAL DATA

Code	Type / Description	Wattage(W)	Total Luminous Flux(lm)	Power Factor(pf)	Beam Angle	CRI (Ra)	IP Rating
LD18M1SG124	4000K, Gray, Spot Light, Eaglerise Driver	12W	1200	>0.5	36°	>90	54

TECHNICAL INFORMATION

Frequency	50 - 60 Hz
Input Voltage	220-240 VAC
Life Span	50000 H
Protection class	Class II
SDCM	≤ 2
Ambient temperature(Ta)	-15℃+55℃
Operating temperature	-15℃+45℃
UGR	<17
Product Face Size (mm)	Ø72 × H78 mm
Product Weight (gr)	431
Energy Usage	A+
Lumen Maintenance (L70)	1200

INSTRUCTION

Instruction Manual	

PHOTOMETRIC DIAGRAMS

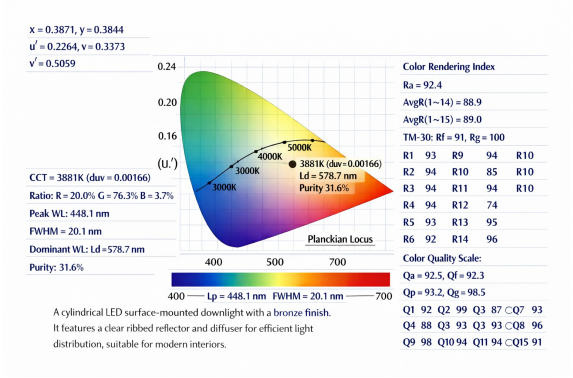

Chromaticity / CCT diagram

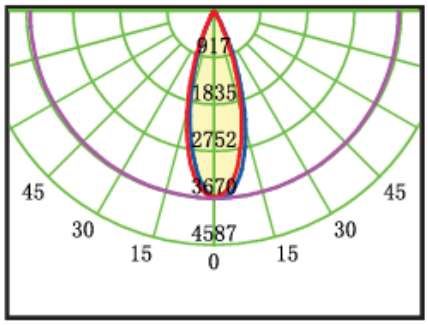

Beam angle / polar diagram

DIMENSION DRAWINGS

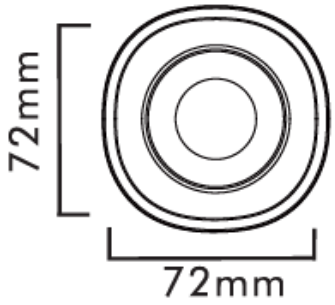

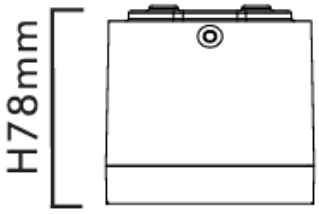

GENERAL INFORMATION

Body Material	Die-Cast Aluminum
Mounting Type	Surface
Driver Brand	Eaglerise/Philips
Chip Brand	Osram/Bridgelux
LED Type	COB

APPLICATION AREAS

- Galleries & Display Areas: Artwork, Decorative Objects, Exhibition Features
- Beauty / Retail: Beauty Salons, Cosmetic Displays, Product Counters
- Commercial Buildings: Retail Displays, Showrooms, Product Display Areas, Feature Walls

