





ADJUSTABLE RECESSED SPOTLIGHT 3×10W ROUND SERIES ARTIVIA - R220AH1 LOOX PLUS

OVERVIEW

The ARTIVIA Adjustable Recessed Spotlight is a round multi-head luminaire designed for controlled directional and accent lighting. Its three adjustable light heads allow illumination to be directed toward different objects, surfaces or feature areas from a single ceiling fixture, providing greater flexibility while maintaining a clean architectural appearance. It is well suited to retail, showrooms, hospitality and residential feature lighting.

PRODUCT VARIANTS & TECHNICAL DATA

Code	Type / Description	Wattage(W)	Total Luminous Flux(lm)	Luminous Efficacy(lm/W)	Power Factor(pf)	Beam Angle	CRI (Ra)	IP Rating
LD18R2EG303 LD18R21G304 LD18R2EG306	3000K / 4000K / 6500K, Gray, Spot Light, Eaglerise Driver	30W	3000	100	>0.5	36°	>90	54

TECHNICAL INFORMATION

Frequency	50 -60Hz
Input Voltage	220-240 VAC
Life Span	50000 H
Protection class	II
SDCM	≤ 2
Sensor	No
Ambient temperature(Ta)	-15℃+55℃
Operating temperature	-15℃+45℃
UGR	<17
Product Face Size (mm)	Ø220.6 × H109 mm
Product Weight (gr)	370
Energy Usage	A+
Lumen Maintenance (L70)	3000

INSTRUCTION

Instruction Manual	

PHOTOMETRIC DIAGRAMS

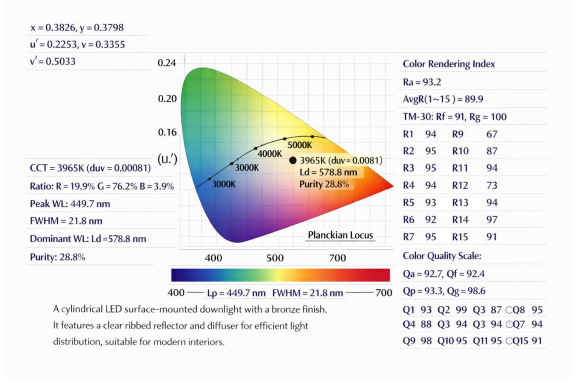

Chromaticity / CCT diagram

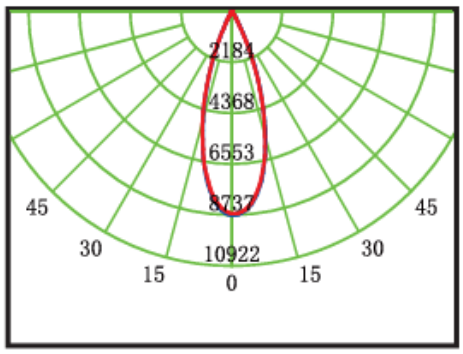

Beam angle / polar diagram

DIMENSION DRAWINGS

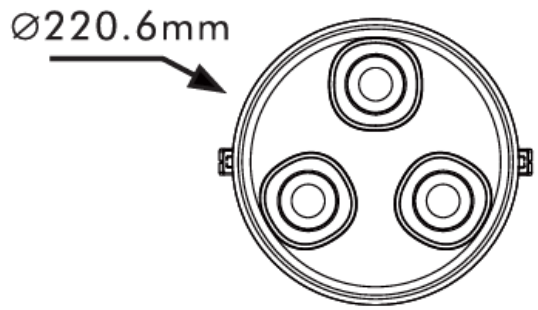

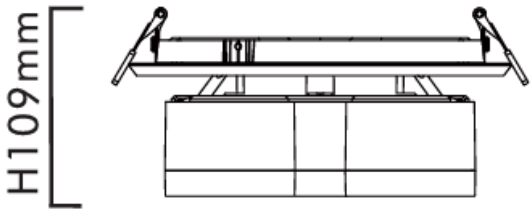

GENERAL INFORMATION

Body Material	Die-Cast Aluminum
Diffuser	PC
Reflector	PC
Mounting Type	Recessed
Cut Size	Ø195–200 mm
Driver Brand	Eaglerise/Philips
Chip Brand	Osram/Bridgelux
LED Type	COB

APPLICATION AREAS

- Hospitality: Lobby Features, Reception Areas, Artwork, Decorative Walls, Lounge Features, etc.
- Residential Building: Living-room Feature Areas, Entrance Zones, Artwork, Display Cabinets
- Commercial Buildings: Showrooms, Retail displays, Product display ,walls Feature areas

