



SURFACE SPOTLIGHT 4×10W SERIES ARTIVIA - L260FH1 LOOX PLUS

OVERVIEW

The ARTIVIA Surface Spotlight is a compact four-module luminaire designed to provide controlled multi-point illumination from a single ceiling fixture. Its integrated optical arrangement helps cover display and feature areas with fewer separate luminaires while maintaining a clean architectural appearance, making it well suited to retail, beauty, gallery and commercial interiors.

PRODUCT VARIANTS & TECHNICAL DATA

Code	Type / Description	Wattage(W)	Total Luminous Flux(lm)	Luminous Efficacy(lm/W)	Power Factor(pf)	Beam Angle	CRI (Ra)	IP Rating
LD180FSG404	4000K, Gray, Spot Light, Eaglerise Driver	40W	4000	100	>0.95	36°	>90	54

TECHNICAL INFORMATION

Frequency	50 - 60Hz
Input Voltage	220-240 VAC
Life Span	50000 H
Protection class	II
SDCM	≤ 2
Sensor	No
Ambient temperature(Ta)	-15℃+55℃
Operating temperature	-15℃+45℃
UGR	<17
Product Face Size (mm)	260 × 196 × 60 mm
Product Weight (gr)	1300
Energy Usage	A+
Lumen Maintenance (L70)	4000

PHOTOMETRIC DIAGRAMS

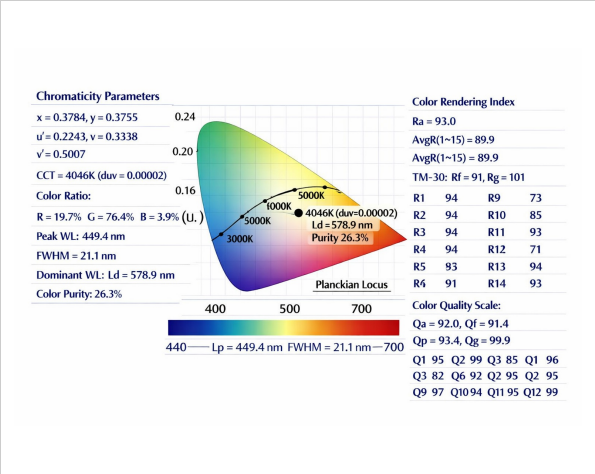

Chromaticity / CCT diagram

DIMENSION DRAWINGS

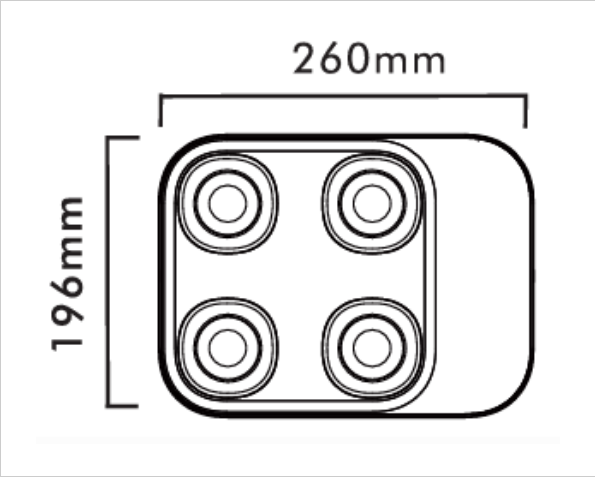

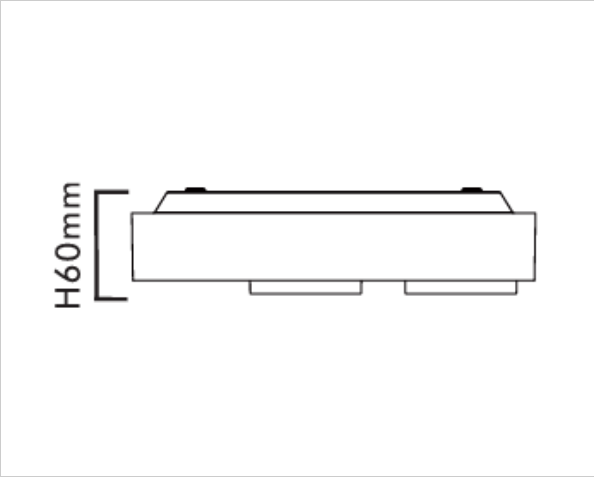

GENERAL INFORMATION

Body Material	Die-Cast Aluminum
Diffuser	PC
Reflector	PC
Mounting Type	Surface
Driver Brand	Eaglerise/Philips
Chip Brand	Osram/Bridgelux
LED Type	COB

APPLICATION AREAS

- Beauty / Retail: Beauty Salons, Cosmetic Displays, Product Counters
- Commercial Buildings: Retail Displays, Showrooms, Product Display Areas, Feature Walls
- Galleries & Display Areas: Artwork, Decorative Objects, Exhibition Features

