





ADJUSTABLE SPOTLIGHT 2×10W SERIES ARTIVIA - L165AH1 LOOX PLUS

OVERVIEW

The ARTIVIA Adjustable Spotlight is a compact dual-head recessed luminaire designed for flexible, controlled accent lighting. Its two independently adjustable heads allow light to be directed toward separate objects, surfaces or architectural features from a single ceiling fixture, providing greater lighting flexibility while maintaining a clean recessed appearance. It is well suited to retail, galleries, hospitality and residential feature lighting.

PRODUCT VARIANTS & TECHNICAL DATA

Code	Type / Description	Wattage(W)	Total Luminous Flux(lm)	Luminous Efficacy(lm/W)	Power Factor(pf)	Beam Angle	CRI (Ra)	IP Rating
LD185A0G204	4000K, Gray, Spot Light, Eaglerise Driver	20W	2000	100	>0.9	36°	>90	54

TECHNICAL INFORMATION

Frequency	50-60 Hz
Input Voltage	220-240 VAC
Life Span	50000H
Protection class	II
SDCM	≤ 2
Sensor	No
Ambient temperature(Ta)	-15℃+55℃
Operating temperature	-15℃+45℃
UGR	<17
Product Face Size (mm)	172 × 72 × 115 mm
Product Weight (gr)	555
Energy Usage	A+

INSTRUCTION

Instruction Manual	

PHOTOMETRIC DIAGRAMS

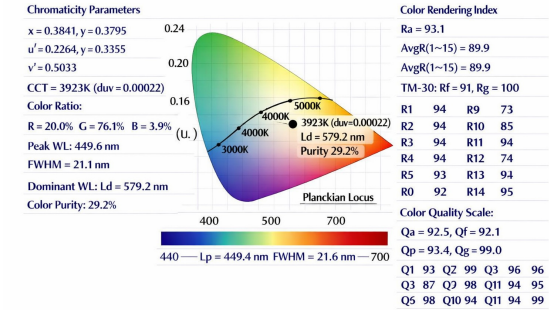

Chromaticity / CCT diagram

DIMENSION DRAWINGS

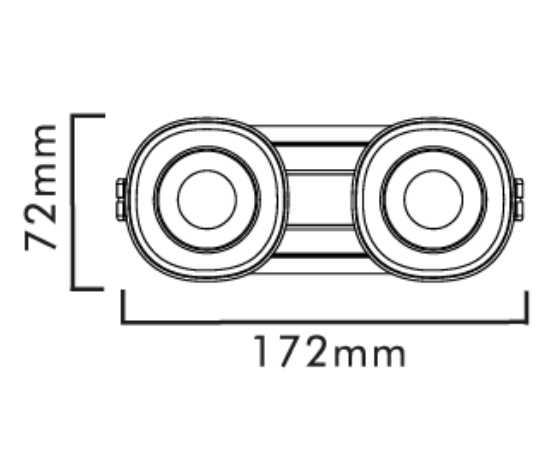

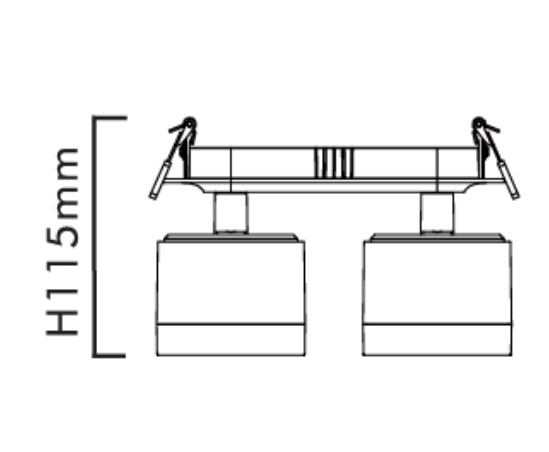

GENERAL INFORMATION

Body Material	Die-Cast Aluminum
Diffuser	PC
Reflector	PC
Mounting Type	Recessed
Cut Size	45mm x 145mm
Driver Brand	Eaglerise/Philips
Chip Brand	Osram/Bridgelux
LED Type	COB

APPLICATION AREAS

- Museums / Galleries: Artwork, Exhibition displays ,Sculptures
- Residential Building: Entrances, Hallways, Dressing Areas, Feature Walls, Artwork Areas, etc.
- Commercial Buildings: Showrooms, Retail displays, Product display ,walls Feature areas

