

SMD DOWNLIGHT 10W ELEGANT SERIES LOOX PLUS

OVERVIEW

This recessed SMD LED downlight combines a deep optical reflector with a clean architectural design to provide comfortable, balanced illumination with reduced glare. An integrated finned heat sink supports reliable thermal performance, while spring-loaded clips ensure secure recessed installation. Available in multiple wattages for residential, hospitality, office, retail and commercial interiors.

PRODUCT VARIANTS & TECHNICAL DATA

Code	Type / Description	Wattage(W)	Total Luminous Flux(lm)	Luminous Efficacy(lm/W)	Power Factor(pf)	Beam Angle	CRI (Ra)	IP Rating
LD212WM0103	2700K / 4000K / 6500K, White, Down Light, Emergency	10W	800	80	>0.5	70°	>80	40

TECHNICAL INFORMATION

Frequency(Hz)	50-60
Input Voltage(VAC)	180-265
Life Span(Hrs)	50000
SDCM	≤3
Sensor	No
Ambient Temperature(Ta)	-15℃+50℃
Operating Temperature	-15℃+45℃
Product Face Size (mm)	Φ 90±2 x53±2
Product Weight (gr)	124
Energy Usage	A+
Lumen Maintenance(L70)	800

PHOTOMETRIC DIAGRAMS

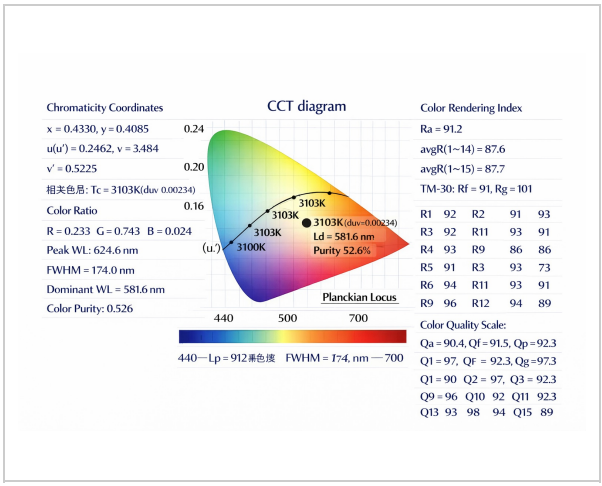

Chromaticity / CCT diagram

DIMENSION DRAWINGS

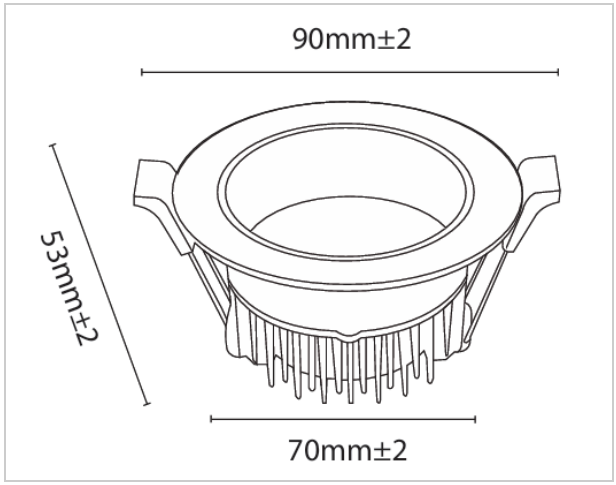

GENERAL INFORMATION

Body Material	Aluminum
Mounting Type	Recessed
Cut Size	Φ70±2mm
LED Type	SMD

APPLICATION AREAS

- Restaurants & Cafés
- Residential Building
- Commerical Buildings










