





EXPLOSION PROOF FLOOD LIGHT 150W A3 SERIES ZONE 2 LOOX

OVERVIEW

An industrial lighting solution designed for demanding environments. It illuminates work areas to support visibility during daily operations. Its robust construction suits challenging operating conditions. Intended for oil and gas facilities, marine installations and chemical processing sites, subject to the approved area classification.

PRODUCT VARIANTS & TECHNICAL DATA

Code	Type / Description	Wattage(W)	Total Luminous Flux(lm)	Luminous Efficacy(lm/W)	CRI (Ra)	IP Rating	Emergency Back up	Zone
LIEA3G01505 LIEA3G01506	5000k / 6500K, Gray, Explosion Proof Lights, Zone 2	150W	2100	140	>70	67	Optional	2

TECHNICAL DATA

Frequency	50/60
Input Voltage	200-250
Life Span	50000
IK	10
Protection class	Tempered glass & PC
SDCM	<3
Ambient temperature(Ta)	T5: -40°C to +45°C (-40°F to +113°F); T6: -40°C to +40°C (-40°F to +104°F)
Product Face Size (mm)	485x340x365
Product Weight (gr)	8300
Lumen Maintenance	L70> 78,000 Operation Hours@55°C
Power Factor	>0.95
Beam Angle	40°/45°/60°/90°

MATERIALS / TYPE

Body	Copper-free aluminum
Diffuser	Tempered glass & PC
Mounting Type	Ceiling, Wall, Hook, Pole, Stanchion
Cable & Gland Type	Side: 3/4 NPT, M20, M25, 1/2NPT Top: 3/4 NPT, M25

INSTRUCTION

Instruction Manual	

DIMENSION DRAWINGS

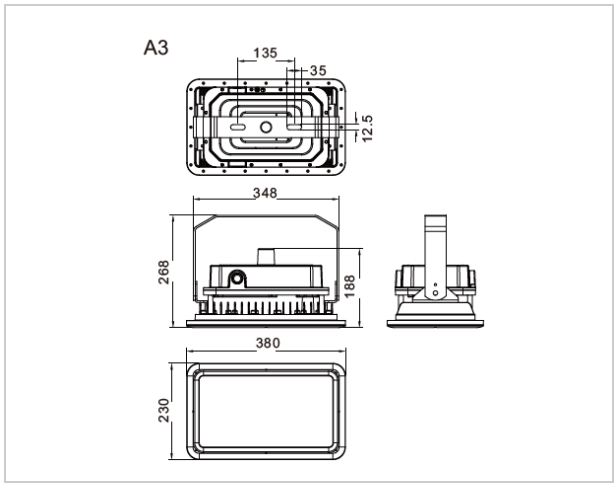

APPLICATION AREAS

- Oil & Gas Processing Facilities
- Refineries & Petrochemical Plants
- Offshore Platforms
- Marine & Industrial Facilities
- Metal treatment
- Other high humidity, high dust, high temperature, vapor locations
















