





COB DOWNLIGHT 2*10W HARMONIOUS SERIES LOOX PLUS

OVERVIEW

A recessed LED fixture with a rectangular frame and adjustable reflector heads. The heads can be aimed to highlight merchandise, artwork, or architectural details while the frame stays fixed. It is suited to accent lighting in retail, hospitality, and residential interiors.

PRODUCT VARIANTS & TECHNICAL DATA

Code	Type / Description	Wattage(W)	Total Luminous Flux(lm)	Luminous Efficacy(lm/W)	Power Factor(pf)	Beam Angle	CRI (Ra)	IP Rating
LDO222L0103 LDO222L0104 LDO222L0106	2700K / 4000K / 6500K, Black, Down Light, On/Off Driver	20W	1800	90	>0.5	24°	>80	40

TECHNICAL INFORMATION

Frequency(Hz)	50-60
Input Voltage(VAC)	180-265
Life Span(Hrs)	50000
SDCM	<5
Sensor	No
Ambient Temperature(Ta)	-15℃+50℃
Operating Temperature	-15℃+45℃
Product Face Size (mm)	200x110x75
Product Weight (gr)	334
Energy Usage	A++
Lumen Maintenance(L70)	1800

INSTRUCTION

Instruction Manual	

PHOTOMETRIC DIAGRAMS

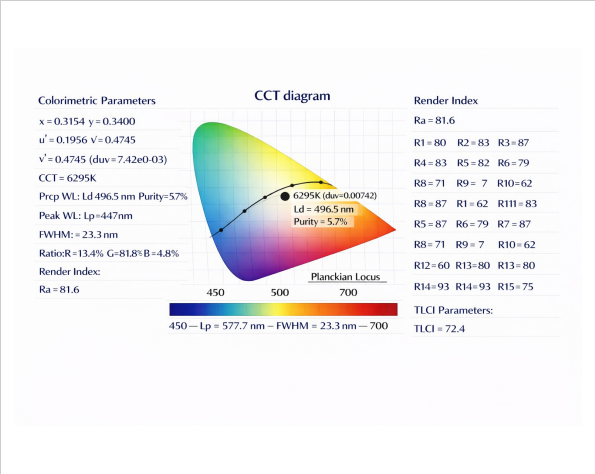

Chromaticity / CCT diagram

DIMENSION DRAWINGS

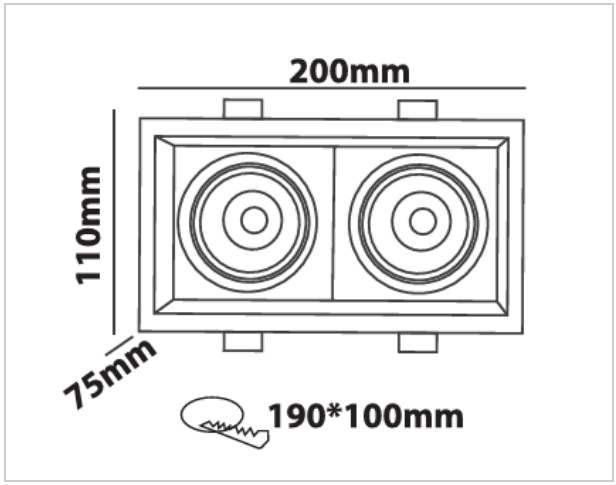

GENERAL INFORMATION

Body Material	Aluminum
Mounting Type	Recessed
Cut Size	190x100mm
Driver Brand	Emergency/Philips
Chip Brand	Osram/Bridgelux
LED Type	COB

APPLICATION AREAS

- Retail & Showrooms: textile display tables, clothing racks, and accessory counters
- Hotels & Hospitality: lobby display consoles, reception counters, and buffet stations
- Residential Interiors: entryway consoles, dining sideboards, and built-in display shelving

5 YEARS GUARANTEE
ISO 9001:2015
ISO 14001:2015
صنع في عُمان
Made in Oman