





COB DOWNLIGHT 3*10W HARMONIOUS SERIES LOOX PLUS

OVERVIEW

A recessed LED fixture with adjustable spotlight heads in a single rectangular frame. The heads can be aimed at different points to highlight merchandise, artwork, or architectural details without moving the fixture. It is suited to accent lighting in retail, hospitality, and residential interiors.

PRODUCT VARIANTS & TECHNICAL DATA

Code	Type / Description	Wattage(W)	Total Luminous Flux(lm)	Luminous Efficacy(lm/W)	Power Factor(pf)	Beam Angle	CRI (Ra)	IP Rating
LDO223L0103 LDO223L0104 LDO223L0106	2700K / 4000K / 6500K, Black, Down Light	30W	2700	90	>0.5	35°	>80	40

TECHNICAL INFORMATION

Frequency(Hz)	50-60
Input Voltage(VAC)	180-265
Life Span(Hrs)	50000
Sensor	No
Ambient Temperature(Ta)	-15℃+50℃
Operating Temperature	-15℃+45℃
Product Face Size (mm)	285x110x75
Product Weight (gr)	580
Energy Usage	A++
Lumen Maintenance(L70)	2700

INSTRUCTION

Instruction Manual	

PHOTOMETRIC DIAGRAMS

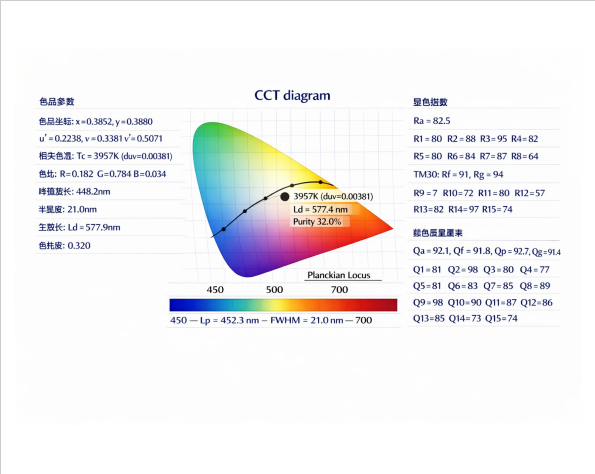

Chromaticity / CCT diagram

DIMENSION DRAWINGS

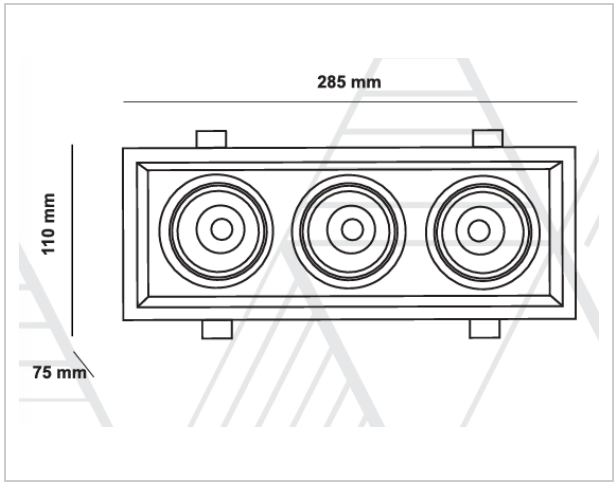

GENERAL INFORMATION

Body Material	Aluminum
Mounting Type	Recessed
Cut Size	275x100mm
LED Type	COB

APPLICATION AREAS

- Retail & Showrooms: textile display tables, clothing racks, accessory counters
- Hotels & Hospitality: lobby display consoles, reception counters, buffet stations
- Residential Interiors: entryway consoles, dining sideboards, built-in display shelving

