





COB DOWNLIGHT 15W E12 SERIES LOOX PLUS

OVERVIEW

This recessed LED downlight features a deep anti-glare reflector and an efficient optical design to deliver controlled, balanced illumination with enhanced visual comfort. Its refined recessed form creates a clean architectural ceiling appearance, making it an ideal lighting solution for commercial, hospitality, retail, office and residential interiors.

PRODUCT VARIANTS & TECHNICAL DATA

Code	Type / Description	Wattage(W)	Total Luminous Flux(lm)	Luminous Efficacy(lm/W)	Power Factor(pf)	Beam Angle	CRI (Ra)	IP Rating
LPD2L120153 LPD2L120154 LPD2L120156	2700K / 4000K / 6500K, Black, Down Light	15W	1500	100	>0.5	75°	>80	40

TECHNICAL INFORMATION

Frequency(Hz)	50-60
Input Voltage(VAC)	180-265
Life Span(Hrs)	50000
IK	02
SDCM	<2
Sensor	No
Ambient Temperature(Ta)	-15℃+50℃
Operating Temperature	-15℃+45℃
UGR	<17
Product Face Size (mm)	Ø116.5 × H65 mm
Product Weight (gr)	151
Energy Usage	A+

INSTRUCTION

Instruction Manual	

PHOTOMETRIC DIAGRAMS

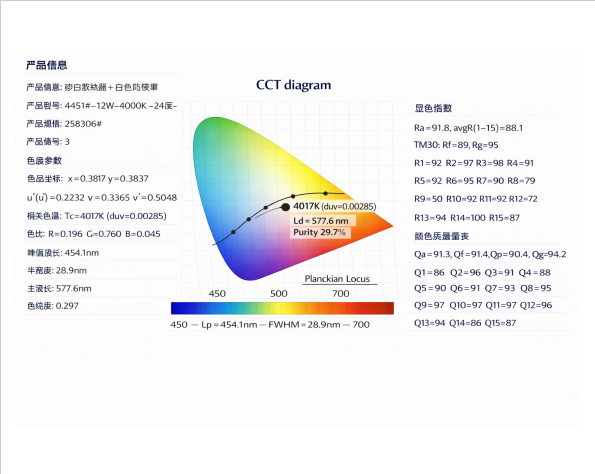

Chromaticity / CCT diagram

DIMENSION DRAWINGS

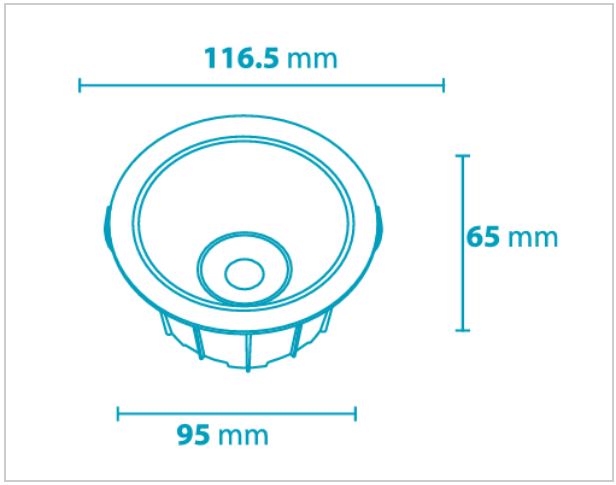

GENERAL INFORMATION

Body Material	Aluminum
Mounting Type	Recessed
Cut Size	Φ95mm
LED Type	COB

APPLICATION AREAS

- Retail Spaces: Sales Floors, Boutiques, Product Display Areas, Fitting-Room Zones, Circulation Areas, etc.
- Residential Building: Living Rooms, Entrances, Hallways, Dressing Areas, etc.
- Commercial Buildings: Reception Areas, Waiting Areas, Corridors, Meeting Rooms, Entrance Areas, etc.

5 YEARS GUARANTEE
ISO 9001:2015
ISO 14001:2015
صنع في عُمان
Made in Oman