



# MAGNETIC LIGHT 22W GDL20 SERIES LOOX PLUS

## OVERVIEW

A distinctive corner-shaped linear luminaire designed to create continuous architectural lighting across directional changes in a track layout. It provides smooth, uniform illumination while visually connecting two lighting directions in a clean geometric form. Its main advantage is the ability to integrate corners and transitions into a coordinated lighting composition. Suitable for residential, retail, hospitality, commercial, and architectural interior applications.

## PRODUCT VARIANTS & TECHNICAL DATA

| Code | Type / Description | Wattage(W) | Total Luminous Flux(lm) | Luminous Efficacy(lm/W) | Power Factor(pf) | Beam Angle | CRI (Ra) | IP Rating |
|---|---|---|---|---|---|---|---|---|
| LKLGDLR0223 LKLGDLR0224 | 2700K / 4000K, recessed, Magnetic Light | 22W | 1540 | 70 | 0.5 | 120° | ≥90 | 20 |

## TECHNICAL INFORMATION

| | |
|---|---|
| **Frequency(Hz)** | 60 |
| **Input Voltage(V)** | 48 |
| **Life Span(Hrs)** | 50000 |
| **Sensor** | No |
| **Operating Temperature** | -20℃+50℃ |
| **Product Face Size (mm)** | 302*322*25 |
| **Product Weight (gr)** | 300 |
| **Energy Usage** | A+ |
| **Lumen Maintenance(lm)** | 1540 |

## INSTRUCTION

| | |
|---|---|
| **Instruction Manual** | |

## PHOTOMETRIC DIAGRAMS

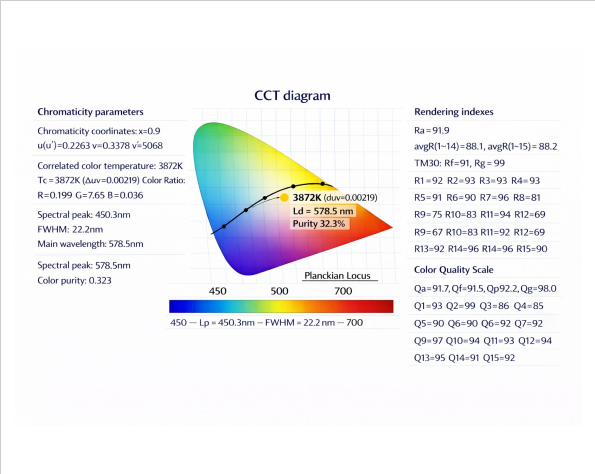


*Chromaticity / CCT diagram*

## DIMENSION DRAWINGS

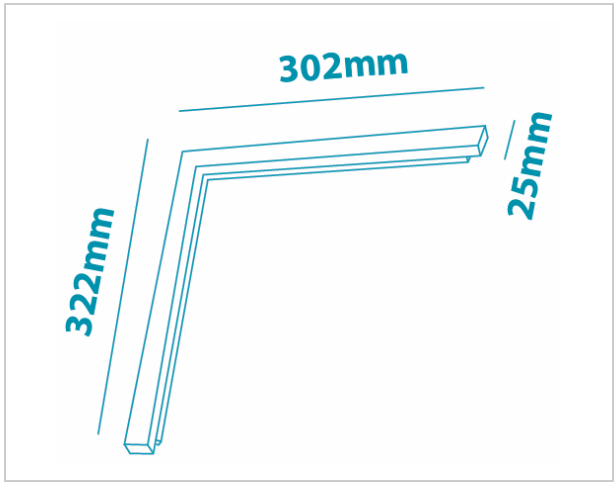

## GENERAL INFORMATION

| | |
|---|---|
| **Body Material** | Aluminum |
| **Diffuser** | Forsted |
| **Mounting Type** | Recessed/Surface |
| **Chip Brand** | Bridgelux |
| **LED Type** | SMD |

## APPLICATION AREAS

- Hotels & Restaurants: Hotel Lobbies & Atriums, Bar Counters, Dining Booths & Lounge Areas
- Residential Building: Dining Table & Kitchen Island, Living Room / TV Wall, Bedrooms
- Commercial & Office Spaces: Reception Desks,Conference Rooms, Retail Stores & Boutique Showrooms