






COB DOWNLIGHT 10W HARMONIOUS SERIES ROUND LOOX PLUS

OVERVIEW

Modern recessed LED downlight designed for residential interiors, ideal for living rooms and general ambient lighting. Features a sleek white housing with a deep anti-glare reflector for comfortable illumination and improved visual comfort. Provides efficient, uniform light distribution with a clean and minimalist appearance, making it suitable for contemporary ceiling installations.

PRODUCT VARIANTS & TECHNICAL DATA

Code	Type / Description	Wattage(W)	Total Luminous Flux(lm)	Luminous Efficacy(lm/W)	Power Factor(pf)	Beam Angle	CRI (Ra)	IP Rating
LDO282EM103 LDO282EM104	2700K / 4000K / 6500K, Black, Down Light, Emergency	10W	900	90	>0.5	24°	>90	20

TECHNICAL INFORMATION

Frequency(Hz)	50-60
Input Voltage(VAC)	180-265
Life Span(Hrs)	50000
SDCM	<5
Ambient Temperature(Ta)	-20℃+50℃
Operating Temperature	-20℃+45℃
Product Face Size (mm)	98xH75
Product Weight (gr)	190
Energy Usage	A++
Dimming Function	Optional (Dimmable Version Available)

PHOTOMETRIC DIAGRAMS

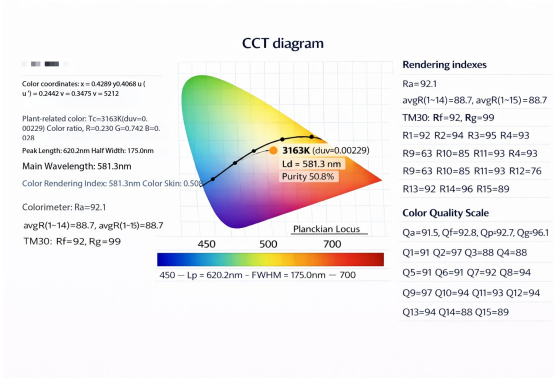

Chromaticity / CCT diagram

DIMENSION DRAWINGS

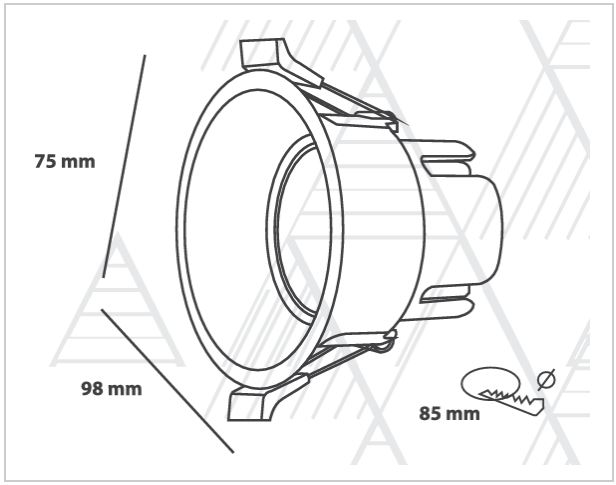

GENERAL INFORMATION

Body Material	Aluminum
Reflector	Black/Silver/White/Gold
Mounting Type	Recessed
Cut Size	Φ85mm
Driver Brand	Philips/Lifud/Eaglerise
Chip Brand	Osram/Bridgelux/Epistar
LED Type	COB

APPLICATION AREAS

- Residential Interiors:entryway consoles, along hallways, over display niches
- Retail Stores & Showrooms:product display tables, over sample counters, inside fitting rooms










