



GARDEN LIGHT 100W LOOX

OVERVIEW

Led garden light is a state-of-the-art luminaries that includes the latest advances of led technology, complemented by a simply, yet elegant ergonomic design.Perfect for installing on 3-10m poles both wide and narrow bicycle paths, parking lots, parks etc.

DIMENSION DRAWINGS

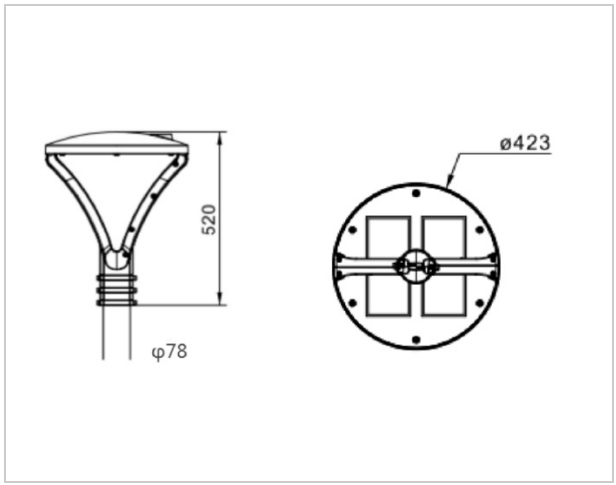

5 YEARS GUARANTEE

ISO 9001:2015

صنع في عُمان
Made in Oman

CB RoHS