



# COB DOWNLIGHT 10W LOOX PRO

## OVERVIEW

A compact recessed LED fixture with a black trim and a deep-set lens that directs light downward. The recessed lens helps shield the light source from direct view at wider angles. It can be used for general or accent lighting in residential, hospitality, and retail interiors

## PRODUCT VARIANTS & TECHNICAL DATA

| Code | Type / Description | Wattage(W) | Total Luminous Flux(lm) | Luminous Efficacy(lm/W) | Power Factor(pf) | Beam Angle | CRI (Ra) | IP Rating |
|---|---|---|---|---|---|---|---|---|
| LPD20L10101<br>LPD20L10107<br>LPD20L10108<br>LPD20L10103<br>LPD20L10104<br>LPD20L10106 | 3CCT / 3CCT DIP Switch / 4CCT DIP Switch / 3000K / 4000K / 6500K, Black, Down Light | 10 | 860 | 86 | >0.5 | 60° | >80 | 20 |

## TECHNICAL INFORMATION

| | |
|---|---|
| **Frequency(Hz)** | 50 |
| **Input Voltage(VAC)** | 165-265 |
| **Life Span(Hrs)** | 30000 |
| **Ambient temperature(Ta)** | -20 , +50 |
| **Operating temperature** | -20 , +50 |
| **Product Face Size (mm)** | 85x48 |
| **Product Weight (gr)** | 128 |
| **Energy Usage** | A+ |
| **Lumen Maintenance(lm)** | 860 |

## PHOTOMETRIC DIAGRAMS

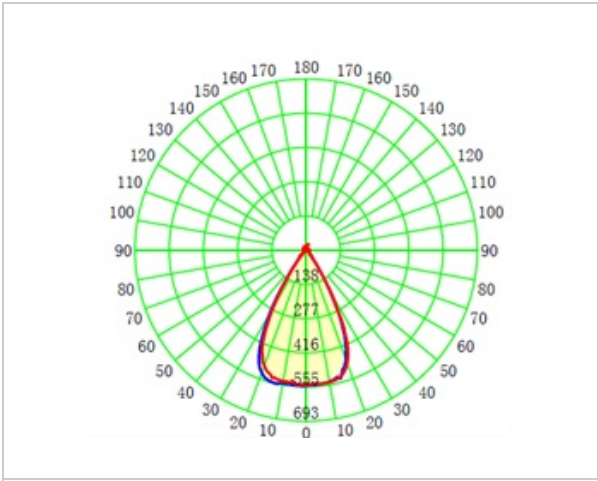


*Beam angle / polar diagram*

## DIMENSION DRAWINGS

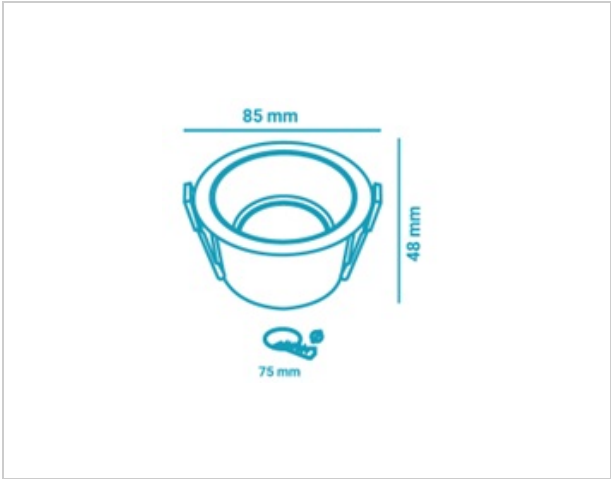

## GENERAL INFORMATION

| | |
|---|---|
| **Body Material** | Aluminum |
| **Diffuser** | PC |
| **Mounting Type** | Recessed |
| **Cut Size** | 75 |

## APPLICATION AREAS

- Retail Store — Merchandise display tables, display plinths, checkout counters.
- Hotel — Reception counters, lobby display tables, guest-room luggage benches
- Residential — Entryway consoles, kitchen islands, decorative display niches.