





COB DOWNLIGHT 10W SERIES 4508F LOOX PLUS

OVERVIEW

A round recessed LED fixture that directs light onto surfaces and displays below. Its deep-set reflector helps shield the light source from side views. It is suited to accent lighting in retail, hospitality, and residential interiors.

PRODUCT VARIANTS & TECHNICAL DATA

Code	Type / Description	Wattage(W)	Total Luminous Flux(lm)	Luminous Efficacy(lm/W)	Power Factor(pf)	Beam Angle	CRI (Ra)	IP Rating
LDO208C0103 LDO208C0104 LDO208C0106	2700K / 4000K / 6500K, Chrome Black, Down Light	10W	850	85	>0.5	30°	>80	40

TECHNICAL INFORMATION

Frequency(Hz)	50-60
Input Voltage(VAC)	180-265
Life Span(Hrs)	50000
Sensor	No
Ambient Temperature(Ta)	-20℃+55℃
Operating Temperature	-20℃+45℃
Product Face Size (mm)	φ85xH49
Product Weight (gr)	130
Energy Usage	A++
Lumen Maintenance(L70)	850

INSTRUCTION

Instruction Manual	

PHOTOMETRIC DIAGRAMS

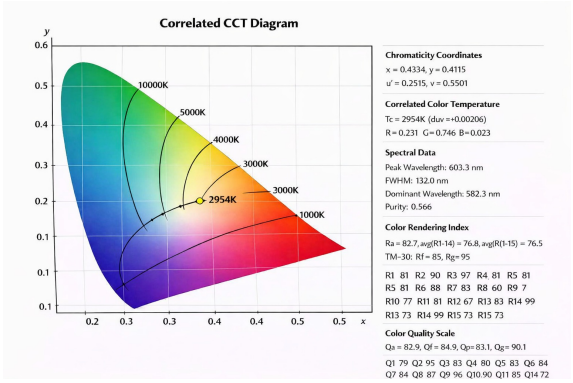

Chromaticity / CCT diagram

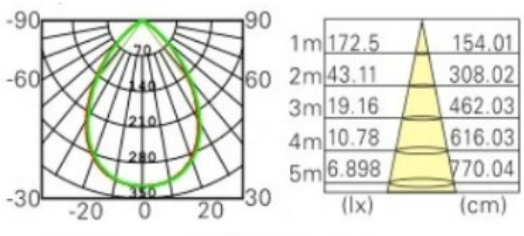

Beam angle / polar diagram

DIMENSION DRAWINGS

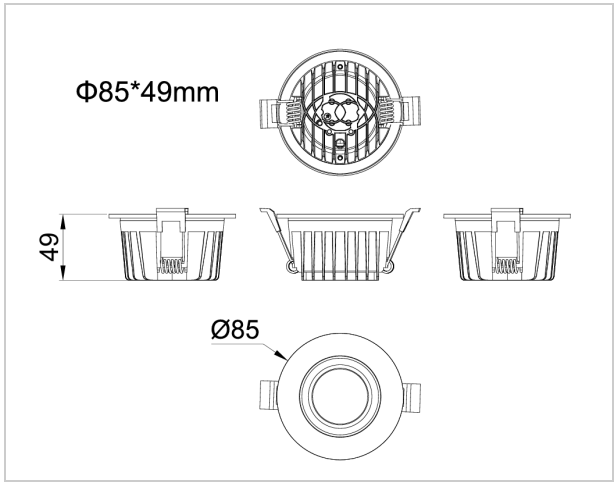

GENERAL INFORMATION

Body Material	Aluminum
Reflector	Changeable
Mounting Type	Recessed
Cut Size	Φ70mm
Driver Brand	Loox/Eaglerise/Lifud
Chip Brand	Osram/Epistar
LED Type	COB

APPLICATION AREAS

- Retail Stores & Showrooms:material sample counters, product display islands.
- Hotels & Hospitality:reception desks, lobby display tables, and guest-room minibar counters
- Residential Interiors:entryway consoles, built-in display niches, and dining-room sideboards

5 YEARS GUARANTEE
ISO 9001:2015
ISO 14001:2015
صنع في عُمان
Made in Oman