



COB DOWNLIGHT 15W SERIES 4515F LOOX PLUS

OVERVIEW

A round recessed LED fixture that directs light onto surfaces and displays below. Its deep-set reflector helps shield the light source from side views. It is suited to accent lighting in retail, hospitality, and residential interiors.

PRODUCT VARIANTS & TECHNICAL DATA

Code	Type / Description	Wattage(W)	Total Luminous Flux(lm)	Luminous Efficacy(lm/W)	Power Factor(pf)	Beam Angle	CRI (Ra)	IP Rating
LDO210C0153 LDO210C0154 LDO210C0156	2700K / 4000K / 6500K, Chrome Black, Down Light	15W	1275	85	>0.5	30°	>80	40

TECHNICAL INFORMATION

Frequency(Hz)	50-80
Input Voltage(VAC)	180-265
Life Span(Hrs)	50000
Sensor	No
Ambient Temperature(Ta)	-20℃+55℃
Operating Temperature	-20℃+45℃
Product Face Size (mm)	φ114*H48
Product Weight (gr)	182
Energy Usage	A++
Lumen Maintenance(L70)	1275

INSTRUCTION

Instruction Manual	

PHOTOMETRIC DIAGRAMS

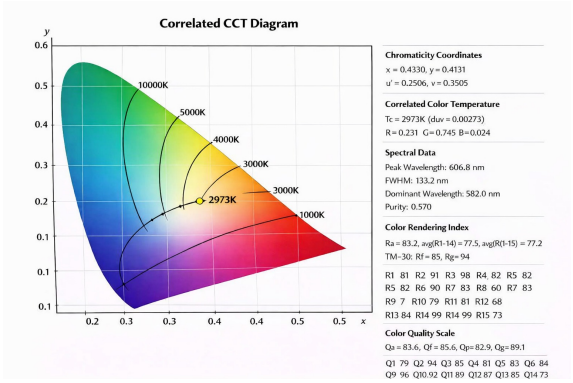

Chromaticity / CCT diagram

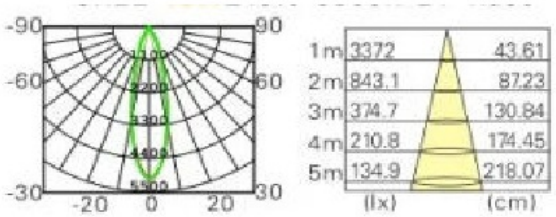

Beam angle / polar diagram

DIMENSION DRAWINGS

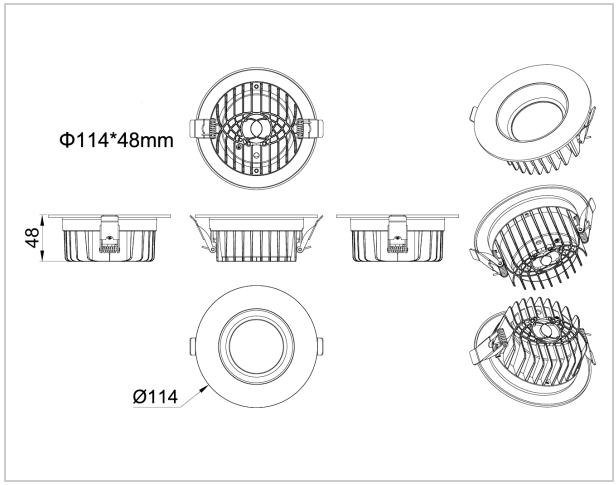

GENERAL INFORMATION

Body Material	Aluminum
Reflector	Changeable
Mounting Type	Recessed
Cut Size	Φ90mm
Driver Brand	Loox/Eaglerise/Lifud
Chip Brand	Osram/Epistar
LED Type	COB

APPLICATION AREAS

- Retail Stores & Showrooms: material sample counters, product display islands
- Hotels & Hospitality: reception desks, lobby display tables, and guest-room minibar counters
- Residential Interiors: entryway consoles, built-in display niches, dining-room sideboards

5 YEARS GUARANTEE
ISO 9001:2015
ISO 14001:2015
صنع في عُمان
Made in Oman