



# COB DOWNLIGHT 20W SERIES 4520F LOOX

## OVERVIEW

A round recessed LED fixture that directs light onto surfaces and displays below. Its deep-set reflector helps shield the light source from side views. It is suited to accent lighting in retail, hospitality, and residential interiors.

## PRODUCT VARIANTS & TECHNICAL DATA

| Code | Type / Description | Wattage(W) | Total Luminous Flux(lm) | Luminous Efficacy(lm/W) | Power Factor(pf) | Beam Angle | CRI (Ra) | IP Rating |
|---|---|---|---|---|---|---|---|---|
| LPD2DWL0203<br>LPD2DWL0204<br>LPD2DWL0206 | 3000K / 4000K / 6500K, DIMMABLE, White, Black, Down Light | 20W | 1700 | 85 | >0.5 | 35° | >80 | 40 |

## TECHNICAL INFORMATION

| | |
|---|---|
| **Frequency(Hz)** | 50-60 |
| **Input Voltage(VAC)** | 180-265 |
| **Life Span(Hrs)** | 50000 |
| **Sensor** | No |
| **Ambient Temperature(Ta)** | -20℃+55℃ |
| **Operating Temperature** | -20℃+45℃ |
| **Product Face Size (mm)** | φ158xH54 |
| **Product Weight (gr)** | 330 |
| **Energy Usage** | A++ |
| **Lumen Maintenance(L70)** | 1700 |

## INSTRUCTION

| | |
|---|---|
| **Instruction Manual** | |

## PHOTOMETRIC DIAGRAMS

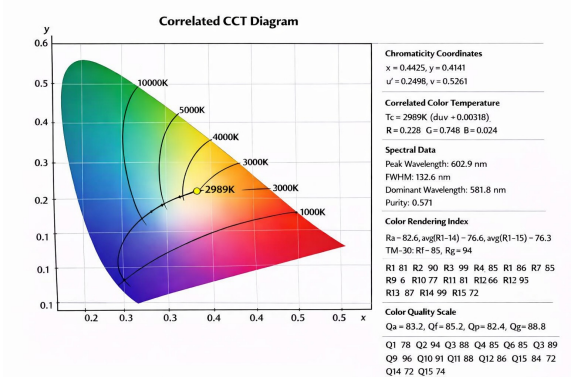


*Chromaticity / CCT diagram*

## DIMENSION DRAWINGS

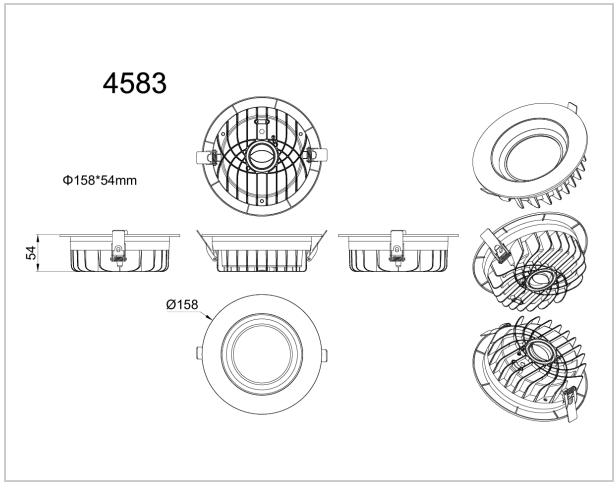

## GENERAL INFORMATION

| | |
|---|---|
| **Body Material** | Aluminum |
| **Reflector** | Changeable |
| **Mounting Type** | Recessed |
| **Cut Size** | Φ140mm |
| **Driver Brand** | Loox/Eaglerise/Lifud |
| **Chip Brand** | Osram/Epistar |
| **LED Type** | COB |

## APPLICATION AREAS

- Retail Stores & Showrooms: material sample counters, product display islands
- Hotels & Hospitality: reception desks, lobby display tables, and guest-room minibar counters
- Residential Interiors: entryway consoles, built-in display niches, dining-room sideboards